Operating Manual

OEM gas measurement modules for continuous gas analysis

INFRA.sens® · ULTRA.sens® · KOMBI.sens® · HUMI.sens® · O2.sens · Thermobox · Accessories

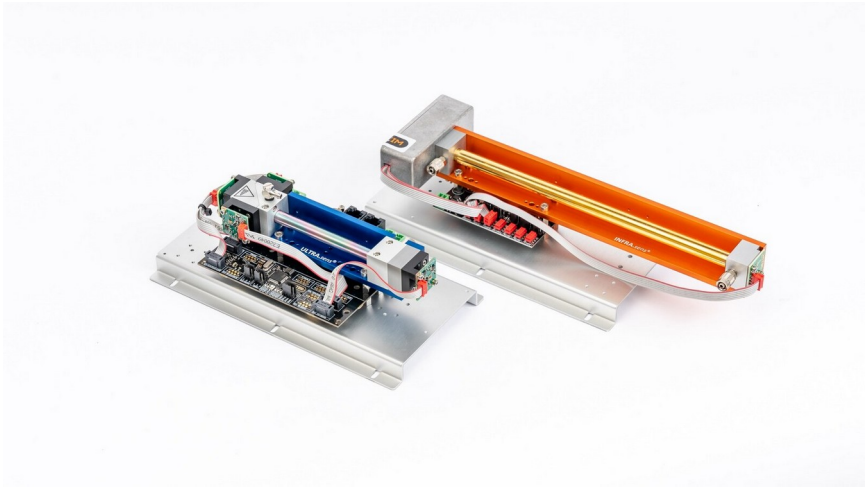

Document	Operating Manual (translation of the original German operating manual)
Document number	BA001-EN
Revision	1.0, 11/2026
Valid for	Base board V1.8.x / V1.9.x / IR-compact V2.0.x · Thermobox V5 · Firmware 5.5.44
Language	English (US)

Wi.Tec-Sensorik GmbH
Schepersweg 41–61
46485 Wesel
Germany
Phone +49 281 206578-20
info@witec-sensorik.de
www.witec-sensorik.de

Copyright © 2026 Wi.Tec-Sensorik GmbH. All rights reserved.

No part of this document may be reproduced by any means, in whole or in part, without the prior written consent of Wi.Tec-Sensorik GmbH.

This document has been prepared with the utmost care. However, Wi.Tec-Sensorik GmbH assumes no responsibility for errors or omissions or for any damage resulting from them. Subject to change of product and documentation.

MARS® (Multi Analyse Research Software) is a word mark of Wi.Tec-Sensorik GmbH.

All trademarks or registered trademarks mentioned are the property of their respective owners.

This revision supersedes all previous editions of the operating manual (Operating Instructions V1.54, Instruction Manual V2.3, Quick Start Guide V001). In case of doubt, the German original version shall prevail.

Contents

0 About this manual 7
0.1 Scope 7
0.2 Target audience 7
0.3 Related documents 8
0.4 Conventions 8
0.5 Revision history 8
1 Safety 9
1.1 Intended use 9
1.2 Foreseeable misuse 9
1.3 Personnel qualification and operator obligations 9
1.4 Structure of safety notices 9
1.5 Basic safety notices 10
1.6 Warranty and liability 12
1.7 Conformity 12
2 Delivery, transport and storage 13
2.1 Scope of delivery 13
2.2 Packaging and transport damage 13
2.3 Unpacking and acclimatization 13
2.4 Storage 13
3 Measuring principles and product overview 14
3.1 Measured components and measuring ranges 14
3.2 INFRA.sens® (NDIR) 15
3.2.1 Analysis cells 16
3.2.2 Pressure and temperature compensation 17
3.3 ULTRA.sens® (NDUV) 17
3.3.1 ULTRA.sens® / INFRA.sens® processline 18
3.4 KOMBI.sens® 18
3.5 HUMI.sens® 19
3.5.1 Output variables and humidity compensation 19
3.6 O2.sens 21
3.6.1 Service life 21
3.6.2 Influence of operating conditions 22
3.6.3 Service life estimation 22
3.6.4 Mounting orientation 24
3.7 P.sens corrosive (absolute pressure sensor 0–1.5 bar) 24
3.7.1 Variants 24
3.7.2 Technical data of the pressure sensor 25
3.8 Products in preparation 26
3.9 Nameplate and channel assignment 26
4 Versions 27
4.1 Mounting plate 27
4.2 Thermobox V5 27

4.2.1 Gas connections....28
4.2.2 Dimensions and hole pattern....29
4.3 Temperature control....30
4.4 Corrosion-resistant version (processline)....31
4.5 Base boards....32
5 Installation....33
5.1 Ambient Conditions....33
5.2 Mounting....33
6 Gas Connection....34
6.1 Tubing and Pipes....34
6.2 Flow Direction....34
6.3 Flow Rate....35
6.4 Sample Conditioning....36
6.5 Tubing Length and Response Behavior....36
6.6 Leak Test....37
6.7 Exhaust Routing....38
7 Electrical Connection....39
7.1 Power Supply....39
7.2 Grounding....39
7.3 Base Board Interfaces....40
7.3.1 Base Board V1.9.x....40
7.3.2 Base Board IR-compact V2.0.x....41
7.3.3 Base Board V1.8.x....42
7.3.4 Connector Board MBB V1.0 (Modbus, without Thermobox)....43
7.3.5 Thermobox V5....45
7.3.6 Thermobox V5 with Modbus Connection....48
7.4 RS232....50
7.5 CAN Bus....50
7.6 Modbus RTU (Option)....51
7.7 Digital Inputs and Outputs....51
7.8 Status LEDs....51
8 Commissioning....53
8.1 Prerequisites....53
8.2 Initial Commissioning....53
9 Software....55
9.1 Download and Installation....55
9.2 Reading Out Without the MARS® Tool....55
10 Adjustment....57
10.1 Check and adjustment intervals....57
10.2 Zero gas....57
10.3 Span gas....57
10.4 Zero-point adjustment....58
10.5 Span-point adjustment....58

10.6 External zero-point trigger....59
10.7 Automatic zero-point adjustment (AZF)....59
10.8 O2.sens and HUMI.sens....59
11 Status messages and troubleshooting....60
11.1 Status LED....60
11.2 Status byte....60
11.3 Troubleshooting....60
12 Maintenance and servicing....62
12.1 Maintenance schedule....62
12.2 Component replacement....62
13 Service, return, and disposal....63
13.1 Contact....63
13.2 Return (RMA)....63
13.3 Disposal....63
14 Accessories and options....64
14.1 Auto-zero function (AZF)....64
14.1.1 Connecting an external AZF to the Thermobox....66
14.2 Analog output....66
14.2.1 Output of HUMI.sens and O2.sens (option)....68
14.3 Other accessories and spare parts....69
15 Technical data....70
Appendix A – Application notes....71
A.1 Sample conditioning....71
A.2 Corrosive gases....71
A.3 Carrier gas dependence....71
A.4 Cross-sensitivities....71
Appendix B – Declaration of conformity....72
Appendix C – Glossary and abbreviations....78

0 About this manual

This Operating Manual describes installation, connection, commissioning, adjustment and maintenance of the Wi.Tec gas measurement modules. Read it completely before working with the gas measurement module, and keep it for the entire service life of the product.

0.1 Scope

Applies to	Versions
INFRA.sens® (NDIR)	Standard and compact; analysis cells AK2 to AK250; processline AK25, AK50, AK100
ULTRA.sens® (NDUV)	with UV LED or EDL source; analysis cells AK100 to AK550; processline AK25 to AK200
processline	corrosion-resistant stainless steel version for INFRA.sens and ULTRA.sens
KOMBI.sens®	combination of INFRA.sens and/or ULTRA.sens
HUMI.sens®, O2.sens, P.sens corrosive	as an option to the modules above
Housing and electronics	Mounting plate, Thermobox V5; base boards V1.8.x, V1.9.x, IR-compact V2.0.x

Table 1: Scope of this manual

Not covered by this manual: BINOS and customer-specific sales versions. Product-specific values (measuring range, accuracy, channel assignment) are given in the data sheet or in the technical specification of your module; in case of deviations, that document takes precedence.

0.2 Target audience

This manual is intended for integrators and operators who install gas measurement modules in analyzer systems, and for their qualified personnel. Basic knowledge of electrical engineering and gas measurement technology is required (see Section 1.3).

0.3 Related documents

Document	Content	Source
Data sheet or technical specification of the module	Measuring range, technical data, channel assignment	included in the delivery
Quick Start Guide	Short version for unpacking and connecting	included in the delivery; download: https://www.witec-sensorik.de/en/downloads/quickstart-manual-gasmodules/
Operating Manual (this document)	current edition	Download: https://www.witec-sensorik.de/en/downloads/manual-gasmodules/
Communication Manual	RS232, CAN, Modbus, CANopen protocols; registers, status byte, device ID	Download: https://www.witec-sensorik.de/en/downloads/communication-manual-gasmodules/
MARS® Tool light manual	Operating the PC software, data logging, adjustment via PC	Download: https://www.witec-sensorik.de/en/downloads/software/
Service instructions	Replacement of components, for trained personnel only	on request

Table 2: Related documents

0.4 Conventions

- Safety notices are classified by hazard level (Section 1.4).
- Instructions consist of prerequisites, numbered steps and result.
- Software buttons are shown in bold in square brackets, e.g. **[Write]**.
- Gas measurement channels are called Ch1 to Ch4 (not to be confused with the formula CH_4 for methane); which gas is measured on which channel is shown on the nameplate (Section 3.9).
- Abbreviations are explained in the glossary (Appendix C).

0.5 Revision history

Revision	Date	Change
0.1	10/2026	Preliminary version. Consolidates the previous manuals (Operating Instructions V1.54, Instruction Manual V2.3, Quick Start Guide V001).
1.0	11/2026	First released edition.

1 Safety

Read this section before commissioning to prevent personal injury and property damage. Wi.Tec-Sensorik develops and manufactures its products in accordance with national and international standards. Proper operation requires correct setup, installation, operation and maintenance.

1.1 Intended use

The gas measurement modules are built-in components for continuous measurement of gas concentrations according to their specification in the data sheet. They are intended for use in non-hazardous locations (General Purpose) and are installed in higher-level analyzer systems.

Intended use also includes observing this manual, complying with the ambient and sample gas conditions (Sections 5, 6 and 15), and using only spare parts specified by Wi.Tec-Sensorik.

1.2 Foreseeable misuse

The following in particular is considered improper use:

- Use in hazardous locations (Ex zones).
- Measurement of explosive gas mixtures (flammable gases with air or oxygen in an ignitable mixing ratio).
- Operation at high, condensing humidity or in a highly corrosive atmosphere.
- Outdoor operation without a suitable protective enclosure.
- Operation outside the limits specified in the data sheet (temperature, pressure, flow rate, supply voltage).
- Opening, modifying or repairing the module, unless described in this manual.

1.3 Personnel qualification and operator obligations

- Read all instructions before setting up, operating or servicing the product.
- Only qualified personnel may install, operate, update, program and maintain the product.
- Train your personnel in installation, operation and maintenance.
- Install the product in accordance with this manual and local and national regulations. Electrical and gas connections must be made properly.
- Observe warnings on the product and in the enclosed documentation.
- Use only spare parts specified by Wi.Tec-Sensorik. Similar-looking parts can cause malfunction or fire.
- If anything is unclear, contact your authorized Wi.Tec distributor or Wi.Tec Service (Section 13).

1.4 Structure of safety notices

Safety notices are structured according to ISO 3864-2 / ANSI Z535.6: signal word with symbol, type and source of the hazard, possible consequences and measures.

Signal word	Meaning
DANGER	Imminent hazard. Failure to comply will result in death or serious injury.
WARNING	Potential hazard. Failure to comply could result in death or serious injury.
CAUTION	Potential hazard. Failure to comply could result in minor injury.
NOTICE	Failure to comply could result in property damage, destruction of the device, reduced performance or data loss.
Information	Important information and tips; failure to comply may result in tasks not being completed successfully.

Table 3: Signal words

1.5 Basic safety notices

⚠ WARNING

Risk of explosion due to improper use

The gas measurement module is not an explosion-protected device. Ignition sources in the module can ignite explosive mixtures.

- ▶ Never use the gas measurement module in hazardous locations (Ex zones).
- ▶ Do not measure explosive gas mixtures.

⚠ WARNING

Leakage of toxic or aggressive gases

In the event of leaks, sample gas can accumulate in and around the gas measurement module. Consequences: poisoning, damage to device components.

- ▶ Connect the gas outlet to an extraction system so that no gas escapes into the environment.
- ▶ With toxic or aggressive gases, purge the gas measurement module with inert gas (e.g. nitrogen); collect the purge gas and dispose of it properly via an exhaust line.
- ▶ Check for leaks regularly (Section 6.6).

⚠ WARNING

Risk of poisoning from hydrogen sulfide (H_2S), e.g. in biogas plants

H_2S is highly toxic even at low concentrations. The odor threshold is 0.02 ppm; higher concentrations numb the sense of smell so that the gas is no longer perceived.

Up to 100 ppm: fatigue, headache, irritation of eyes and mucous membranes. From 500 ppm: danger to life. Above 1,000 ppm fatal within a few minutes, above 5,000 ppm within a few seconds.

- ▶ Connect the gas outlet to an extraction system.
- ▶ Before maintenance work, purge the gas path of the module and the gas sampling point with ambient air or nitrogen for at least 10 minutes until the H_2S concentration is close to 0 ppm.
- ▶ Check for leaks regularly.

⚠ WARNING

Risk of poisoning from carbon monoxide (CO)

CO is highly toxic even at low concentrations (occupational exposure limit 30 ppm). Inhaling more than 5,000 ppm can be fatal.

- ▶ Connect the gas outlet to an extraction system.
- ▶ Before maintenance work, purge with ambient air or nitrogen for at least 10 minutes until the CO concentration is close to 0 ppm.
- ▶ Check for leaks regularly.

⚠ WARNING

Risk of poisoning from other toxic or corrosive sample gases

Other sample gases are also toxic or corrosive, e.g. SO_2 and NO_2 in high concentrations, O_3, NH_3 or Cl_2.

- ▶ Connect the gas outlet to an extraction system.
- ▶ Before maintenance work, purge the gas path and gas sampling point with ambient air or nitrogen.
- ▶ Observe the safety data sheet of the sample gas.
- ▶ Check for leaks regularly.

WARNING

Ultraviolet radiation (ULTRA.sens, KOMBI.sens)

UV LEDs and EDL sources emit high-energy UV radiation (risk group 2 according to DIN EN 62471). Hazard to eyes and skin.

- ▶ Do not look directly into the radiation source.
- ▶ Wear safety goggles and protective clothing when the beam path is open.
- ▶ Switch off the radiation source before working on the beam path.

WARNING

Modifications to the device

Modifications and repairs to the gas measurement module can endanger personnel, the plant and the environment. The manufacturer's warranty and product approvals become void.

▶ Modify or repair the gas measurement module only as described in this manual or in a Wi.Tec service instruction.

NOTICE

Electrostatic discharge (ESD)

Base board, pressure sensor, emitter and detectors are ESD-sensitive and can be destroyed by touching.

▶ Touch electronics only at ESD-protected workstations and while wearing a grounding wrist strap.

1.6 Warranty and liability

- Opening, tampering with or damaging the gas measurement module voids the warranty. This also applies to cutting the Wi.Tec seals on the Thermobox, unless otherwise agreed.
- The warranty also becomes void in the event of damage caused by aggressive chemicals, contamination or ingress of liquids, and if this manual is not observed.
- Wi.Tec-Sensorik is not liable for consequential damage, property damage or personal injury resulting from failure to observe this manual.

1.7 Conformity

The gas measurement modules meet the requirements of the RoHS Directive 2011/65/EU including (EU) 2015/863, the REACH Regulation (EC) 1907/2006 and the POP Regulation (EU) 2019/1021. Details are given in Appendix B.

2 Delivery, transport and storage

2.1 Scope of delivery

The scope of delivery depends on your order and is documented in the enclosed delivery note. On receipt, check the delivery for completeness against the delivery note. Larger deliveries may be split across several packages.

The PC software MARS® Tool light and the documentation are available for download (Section 9).

Not included in the scope of delivery and to be provided by the user: 24 VDC power supply unit (available as an accessory, Section 14.3), PC with Windows 10/11, RS232 data cable and USB/RS232 adapter. The data cable and USB/RS232 adapter are available as accessories (Section 14.3).

2.2 Packaging and transport damage

The modules are delivered individually in cartons with foam inserts, packed in a shipping carton. If transport damage nevertheless occurs:

1. Report externally visible damage to the carrier (postal service, freight forwarder, parcel service) immediately on delivery and have a damage report prepared.
2. Report damage that is not externally visible immediately after unpacking.
3. Keep the carton and packaging for inspection.
4. Inform Wi.Tec-Sensorik (contact in Section 13).

> **Information**
> Only if you proceed in this way can we and our insurer process the claim and supply a replacement.

2.3 Unpacking and acclimatization

1. Remove the module from the packaging. Do not touch the electronics (ESD).
2. Allow the module to reach room temperature before switching it on so that no condensation forms.
3. Remove the dust caps on the gas connections only immediately before connecting the gas lines.

2.4 Storage

- Store dry, dust-free and in the original packaging. Storage temperature −20 to 60 °C.
- O2.sens: ideally store at 15–25 °C. Storage time and temperature shorten the service life of the sensor (Section 3.6).
- Auto-zero function (AZF): storage temperature −20 to 60 °C.

3 Measuring principles and product overview

The Wi.Tec gas measurement modules use physical measuring methods that have been proven in industry and science for decades. Further information can be found in the textbook "Gasmesstechnik in Theorie und Praxis" (Springer Vieweg):

- German edition: ISBN 978-3-658-35277-6
- English edition "Gas Measurement Technology in Theory and Practice": ISBN 978-3-658-37231-6

3.1 Measured components and measuring ranges

The table lists all gases measured with Wi.Tec modules to date, with the smallest and largest measuring range. Other measuring ranges on request.

Gas component	Formula	Principle	Smallest measuring range	Largest measuring range
Ammonia	NH_3	UV	0–500 ppm	0–5,000 ppm
Butane	C_4H_{10}	IR	0–1,000 ppm	0–100 vol%
Chlorine	Cl_2	UV	0–100 ppm	0–30 vol%
Chlorine dioxide	ClO_2	UV	0–100 ppm	0–5,000 ppm
Nitrous oxide	N_2O	IR	0–100 ppm	0–100 vol%
Ethane	C_2H_6	IR	0–1,000 ppm	0–100 vol%
Humidity	H_2O	capacitive	0–20,000 ppm	–
Hexane	C_6H_{14}	IR	0–1,000 ppm	0–100 vol%
Hydrocarbons	C_nH_m	IR	0–1,000 ppm	0–100 vol%
Carbon dioxide	CO_2	IR	0–50 ppm	0–100 vol%
Carbon monoxide	CO	IR	0–500 ppm	0–100 vol%
Methane	CH_4	IR	0–1,000 ppm	0–100 vol%
Ozone	O_3	UV	0–1 ppm	0–5,000 ppm
Propane	C_3H_8	IR	0–1,000 ppm	0–100 vol%
Oxygen	O_2	EC	0–25 vol%	0–100 vol%
Sulfur dioxide	SO_2	UV	0–50 ppm	0–10 vol%
Sulfur dioxide	SO_2	IR	0–500 ppm	0–10 vol%
Sulfur hexafluoride	SF_6	IR	0–50 ppm	0–100 vol%
Hydrogen sulfide	H_2S	UV	0–100 ppm	0–5,000 ppm
Carbon disulfide	CS_2	UV	0–1,000 ppm	0–1 vol%
Nitric oxide	NO	UV	0–1,000 ppm	0–5,000 ppm
Nitric oxide	NO	IR	0–300 ppm	0–5,000 ppm

Gas component	Formula	Principle	Smallest measuring range	Largest measuring range
Nitric oxide	NO	EC	0–100 ppm	–
Nitrogen dioxide	NO_2	UV	0–100 ppm	0–5,000 ppm
Tetrafluoromethane	CF_4	IR	0–30 vol%	0–100 vol%
Water vapor	H_2O	IR	0–5,000 ppm	0–5 vol%
Hydrogen	H_2	TCD	0–5,000 ppm	0–100 vol%

Table 4: Measured components and possible measuring ranges (IR = NDIR, UV = NDUV, EC = electrochemical, TCD = thermal conductivity)

3.2 INFRA.sens® (NDIR)

The INFRA.sens operates on the NDIR principle (non-dispersive infrared absorption) in the spectral range of 2–12 µm. The radiation source is a MEMS emitter: a thin membrane with a heating element that is electrically modulated at 1–10 Hz. At a chip temperature of e.g. 500 °C, it emits broadband radiation from 2 to 12 µm with a maximum at 4 µm.

The sample gas flows through the analysis cell at a volume flow that is as constant as possible. Opposite the emitter is the detector unit with 2 (dual) or 4 (quad) detector elements. Each measuring detector has an interference filter at the absorption maximum of the sample gas; the reference detector measures in a range without significant absorption. With the quad detector, up to 3 gases can be measured simultaneously.

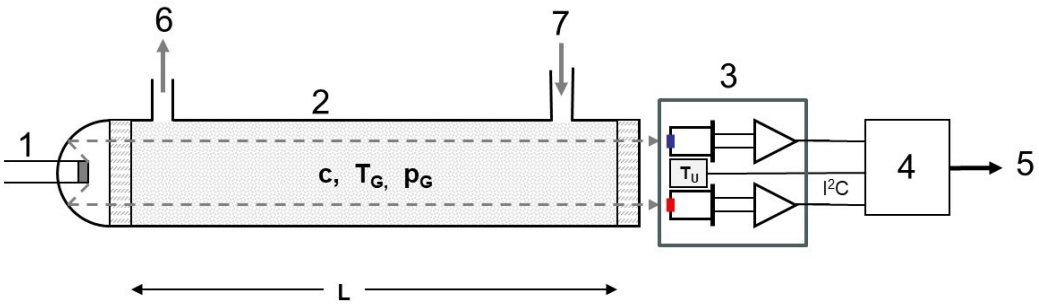

Figure 1: Principle of NDIR measurement with the INFRA.sens: 1 MEMS IR emitter, 2 analysis cell (AK), 3 preamplifier with pyroelectric detector, 4 base board, 5 signal outputs/interfaces, 6 gas inlet, 7 gas outlet

The concentration c is obtained from the Lambert-Beer law:

$$U_{Mess} = U_{Ref} \cdot e^{-\alpha \cdot c \cdot L}$$

- U_{Mess}: signal of the measuring detector
- U_{Ref}: signal without absorption (reference)
- α: absorption coefficient of the sample gas
- c: concentration of the sample gas
- L: cell length (optical path length)

For low concentrations or weakly absorbing gases (e.g. CH_4), the cell length L is increased; for strongly absorbing gases (e.g. SF_6), it is reduced. This allows ranges from 1 ppm to 100 vol% to be covered.

During factory calibration, each module is exposed to at least 5 gas concentrations. From the measured values, a polynomial is stored in the firmware as the linearization function; the linearization error is then below ±1 % of full scale (FS).

3.2.1 Analysis cells

The number in the designation is the cell length in mm. Cells of the corrosion-resistant version (suffix "VA") are described in Section 4.4.

Designation	Length	Example	Version
AK2	2 mm	0–100 vol% CO	Measuring cell made of anodized aluminum
AK5	5 mm	0–100 vol% CO_2	Measuring cell made of anodized aluminum
AK20	20 mm	0–30 vol% CH_4 (INFRA.sens)	Stainless steel tube with gold-plated interior
AK50	50 mm	0–10 vol% CH_4	Stainless steel tube with gold-plated interior
AK100 / AK100G	100 mm	0–5,000 ppm N_2O (INFRA.sens); 0–5,000 ppm NO_2 (ULTRA.sens)	ULTRA.sens: stainless steel tube with SilcoNert® 2000 coating; INFRA.sens (AK100G): stainless steel tube with gold coating
AK250 / AK250G	250 mm	0–500 ppm CO (INFRA.sens); 0–50 ppm SO_2 (ULTRA.sens)	ULTRA.sens: stainless steel tube with SilcoNert® 2000 coating; INFRA.sens (AK250G): stainless steel tube with gold coating
AK550	550 mm	0–10 ppm SO_2 or 0–1 ppm O_3 (ULTRA.sens)	Stainless steel tube with SilcoNert® 2000 coating

Table 5: Available analysis cells (suffix "G" = gold-coated INFRA.sens cell)

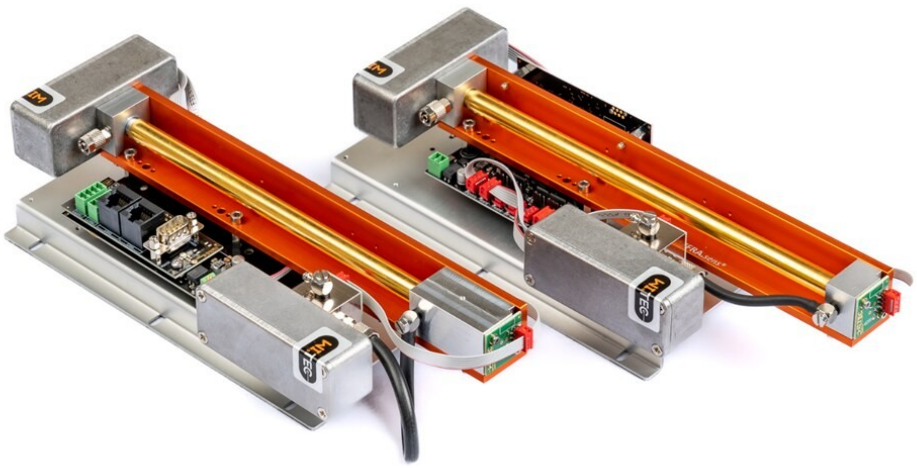

Figure 2: INFRA.sens with three different cell lengths

3.2.2 Pressure and temperature compensation

Gas pressure and gas temperature affect the gas density and thus the reading. Sensors record gas pressure, gas temperature and ambient temperature and pass the values to the base board, which compensates for their influence. Remaining residual errors:

	Temperature	Pressure
Compensation range	5–45 °C	600–1,200 hPa
Zero point	< 1 % FS / 10 K	no influence
Span point	< 1 % FS / 10 K	< 0.1 % of reading / 10 hPa

Table 6: Specified residual errors after compensation

3.3 ULTRA.sens® (NDUV)

The ULTRA.sens works similarly to the INFRA.sens, but in the ultraviolet spectral range from 200 to 450 nm (NDUV principle). In this range, NO, NO_2, SO_2, H_2S, Cl_2 and O_3 have very strong absorption bands. Water vapor, CO_2 and hydrocarbons do not interfere in the UV range.

Radiation sources are long-term stable UV LEDs; for NO/H_2S measurement, an electrodeless discharge lamp (EDL) is also available, which emits almost selectively for NO. A beam splitter couples a defined portion of the radiation out to the reference detector. This fully compensates for intensity changes of the source, e.g. due to aging.

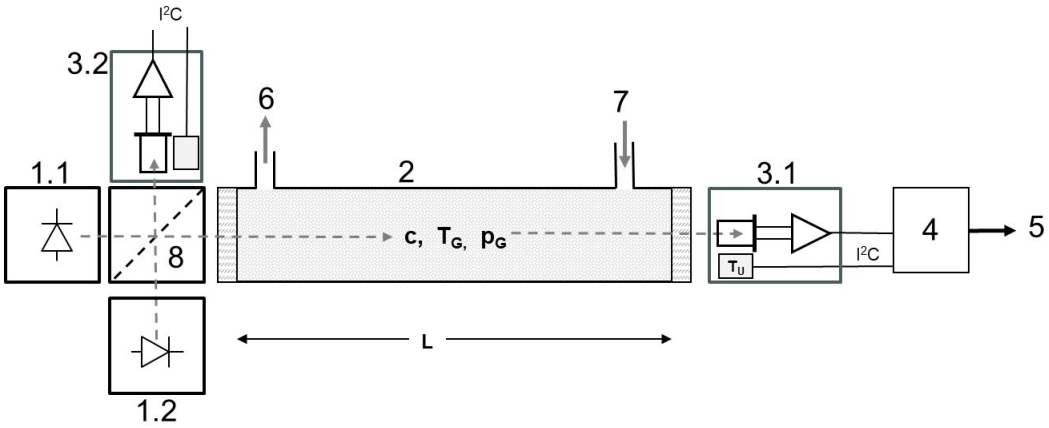

Figure 3: Principle of NDUV measurement with the ULTRA.sens: 1.1 and 1.2 UV LEDs, 2 analysis cell, 3.1 measuring detector, 3.2 reference detector, 4 base board, 5 signal outputs/interfaces, 6 gas outlet, 7 gas inlet, 8 beam splitter

The measuring range is adapted via the cell length (AK100 and AK250 as standard) and the choice of measuring wavelength. With two different UV LEDs, the ULTRA.sens measures two gases simultaneously, typically SO_2 and NO_2. The NO_2 measurement also serves to compensate for the NO_2 cross-sensitivity on SO_2.

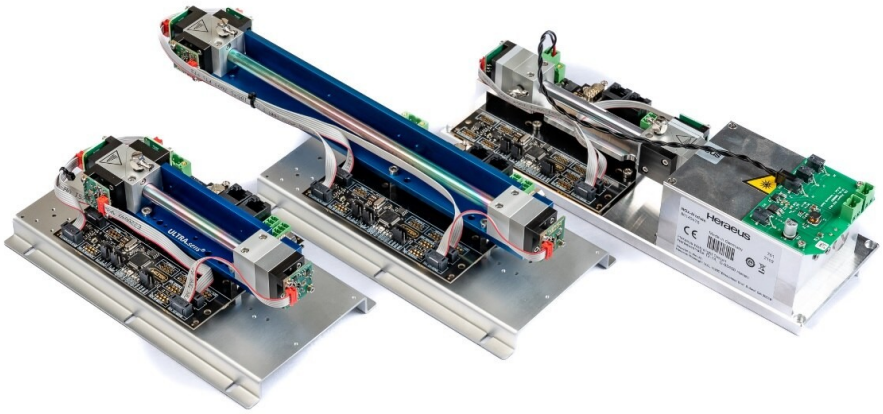

Figure 4: ULTRA.sens versions: left AK100 with 2 measuring channels, center AK250 with 2 measuring channels, right AK100 with EDL source and 1 measuring channel

3.3.1 ULTRA.sens® / INFRA.sens® processline

The corrosion-resistant processline version is intended for corrosive gases such as Cl_2, H_2S or high SO_2 concentrations. It is available for ULTRA.sens and INFRA.sens (Section 4.4).

In this version, the analysis cell is replaced by a process-proof measuring chamber. The standard material is stainless steel 1.4571; other materials on request.

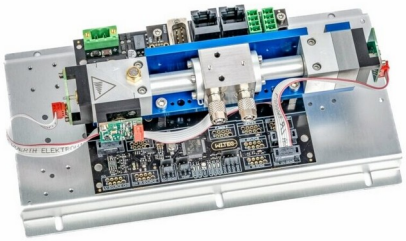

Figure 5: ULTRA.sens processline

3.4 KOMBI.sens®

The KOMBI.sens combines INFRA.sens and/or ULTRA.sens optical benches on a common base board. It measures up to 4 gas channels in the IR and/or UV range, e.g. SO_2 and NO_2 (ULTRA.sens) and CO (INFRA.sens). Oxygen (O2.sens) and gas humidity (HUMI.sens®) can be added as options.

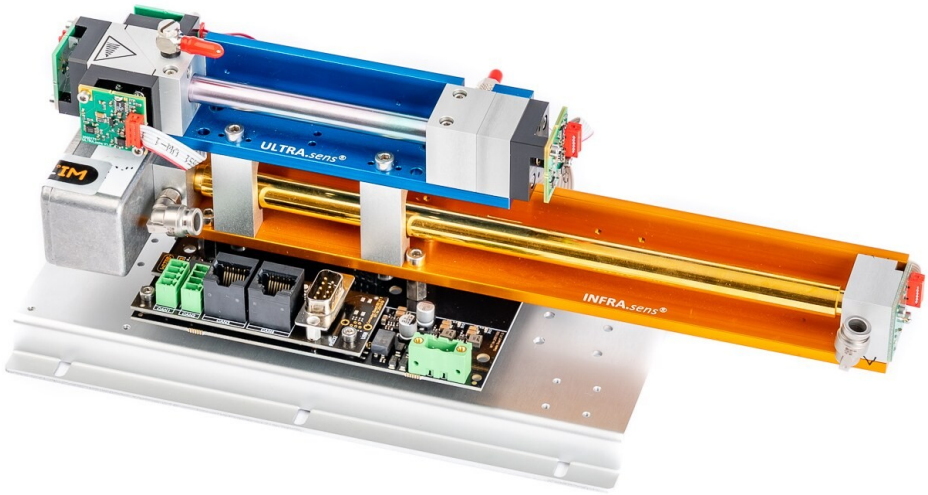

Figure 6: KOMBI.sens consisting of INFRA.sens and ULTRA.sens

3.5 HUMI.sens®

The HUMI.sens measures gas humidity with a capacitive polymer humidity sensor. It is located in an aluminum block through which 0.1–1.5 l/min of sample gas flows. Water vapor is absorbed into the hygroscopic polymer layer between two electrodes and changes its dielectric constant; the capacitance increases almost linearly with humidity. The process is reversible.

Spare part: HUMI.sens Replacement Set, Item no. 2003896.

> **Information**
>
> For humidity measurements, we recommend using PTFE tubing or stainless steel piping (Section 6.1).

3.5.1 Output variables and humidity compensation

The HUMI.sens provides humidity in several units. All values are available in parallel and can be read out via individual interface commands (Communication Manual) or with the MARS® Tool:

Output variable	Unit
Absolute humidity	g/m³
Relative humidity	% RH
H_2O concentration	ppm
Dew point of the gas	°C
Temperature of the humidity sensor	°C

Table 7: Output variables of the HUMI.sens

The humidity value can be used to compensate for the influence of water vapor on the NDIR gas channels Ch1 to Ch4. Compensation can be linear or quadratic.

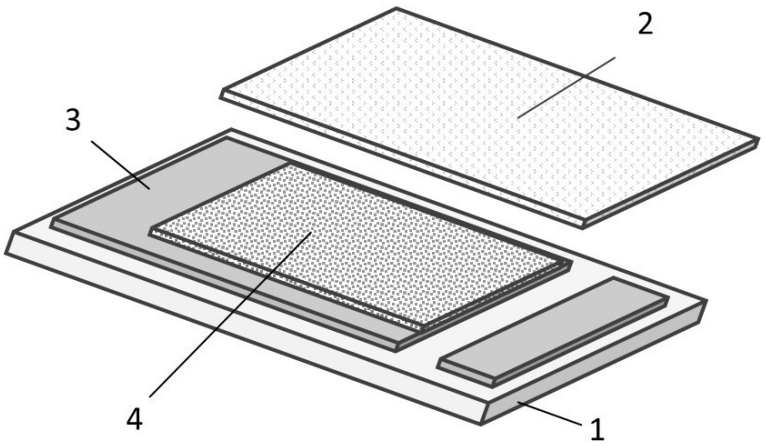

Figure 7: Design of the polymer humidity sensor: 1 Al_2O_3 ceramic substrate, 2 gas-permeable counter electrode, 3 base electrode, 4 sensitive polymer layer

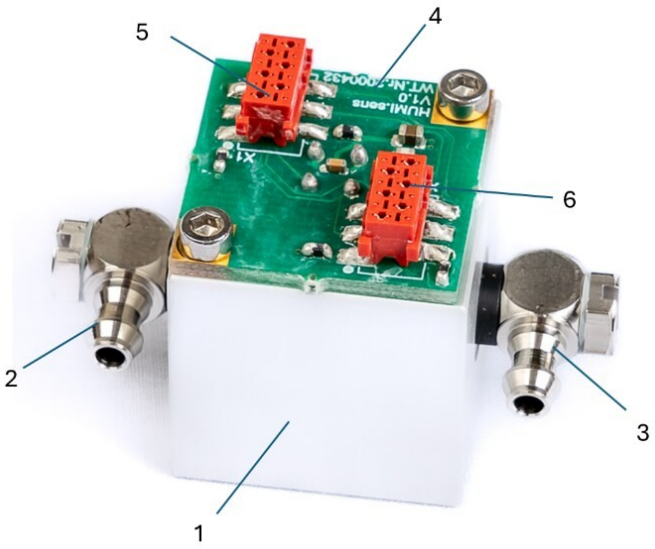

Figure 8: Design of the HUMI.sens: 1 aluminum block for gas routing, 2 gas inlet, 3 gas outlet, 4 evaluation electronics, 5 6-pin connector for connection to the base board, 6 6-pin connector for connecting the pressure sensor

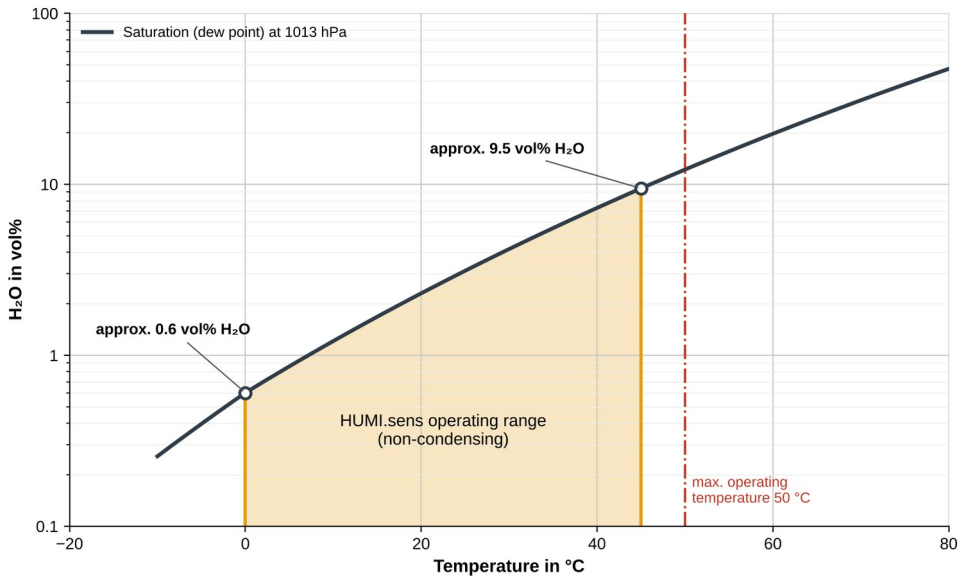

Figure 9: Operating range of the HUMI.sens: saturation concentration of water vapor (dew point) versus temperature at 1,013 hPa; maximum operating temperature 50 °C

3.6 O2.sens

The O2.sens measures oxygen electrochemically. Oxygen passes through a membrane to the liquid electrolyte and reacts there; 4 electrons are released per O_2 molecule. The sensor current increases linearly with the O_2 concentration. A more permeable membrane results in shorter response times but a shorter service life.

Spare part: O2.sens Replacement Set, Item no. 2003884.

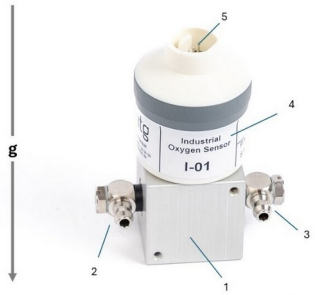

Figure 10: O2.sens with mounting orientation (g = direction of gravity): 1 aluminum block, 2 gas inlet, 3 gas outlet, 4 sensor element with M16 thread, 5 electrical connections

3.6.1 Service life

The service life of the electrochemical O_2 sensor is influenced by electrochemical aging processes and by the respective operating and ambient conditions.

The nominal service life of the sensor is 2,000,000 vol%·h O_2 (oxygen concentration in vol% × operating time in hours). For continuous operation in ambient air with 20.9 vol% O_2, this corresponds mathematically to approx. 10.9 years.

Under reference conditions, the actual expected service life is in the range of 1 to 6 years, depending on the application conditions. The value calculated from the nominal oxygen exposure therefore does not represent a guaranteed operating time. The service life also includes the storage time of the sensor.

Aging may become noticeable through an increasing change in sensor sensitivity and, particularly toward the end of the service life, through an accelerated signal drop.

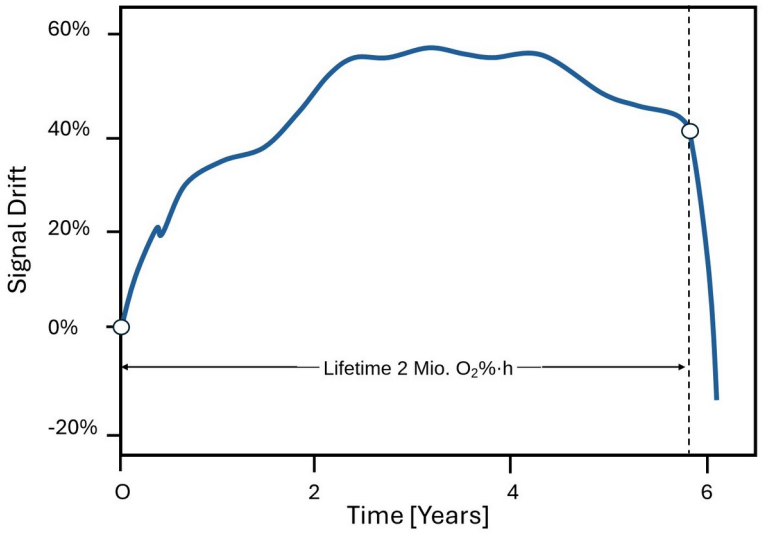

Figure 11: Schematic curve of the signal change of the O_2 sensor over its service life without zero and span adjustment. The actual signal curve may differ depending on the operating conditions.

3.6.2 Influence of operating conditions

The service life is influenced in particular by the following factors:

- **Temperature:** Elevated operating temperatures can accelerate electrochemical aging processes and thus reduce the service life.
- **Gas humidity:** At low relative humidity, the liquid electrolyte can evaporate more quickly. High temperatures in combination with dry process gases and increased gas flow rate in particular can shorten the service life. Avoid condensation.
- **Oxygen concentration:** An increased oxygen concentration or oxygen partial pressure can increase the electrochemical load and thus reduce the usable service life.
- **Gas composition:** Harmful or aggressive gas components can impair the electrochemical components and lead to premature aging (table below).

Effect	Gases
No effect	CO_2, CO, H_2S, N_2, Ar, H_2, CH_4, propane
Moderate effect	Cl_2, CFCs, SO_2, NH_3, NO, NO_2
Strong effect	O_3, acetone, MEK

Table 8: Effect of accompanying gases on measuring behavior and service life of the O2.sens

3.6.3 Service life estimation

The following curves show a calculated estimate of the sensor service life as a function of operating temperature, relative gas humidity and oxygen concentration.

The calculation is based on a simplified aging model using the Arrhenius relationship to describe temperature-dependent aging processes, together with assumed influences of gas humidity and oxygen exposure.

The reference is an operating temperature of 25 °C, a relative humidity of 50 % and an oxygen concentration of 20.9 vol% at 1013 hPa. For these conditions, a modeled reference service life of 5 years is assumed.

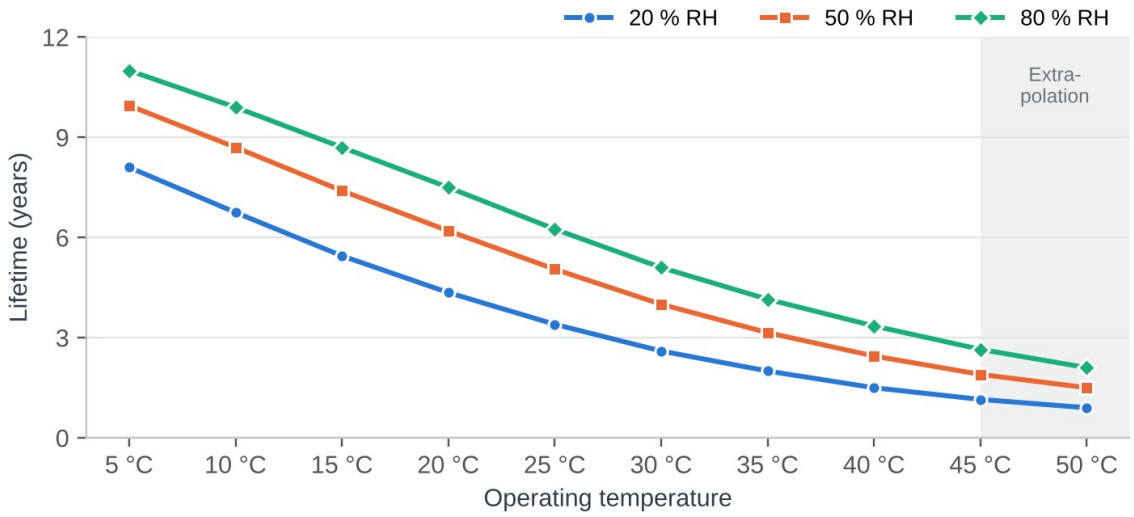

Figure 12: Estimated service life of the O2.sens: influence of temperature and relative humidity at 20.9 vol% O_2

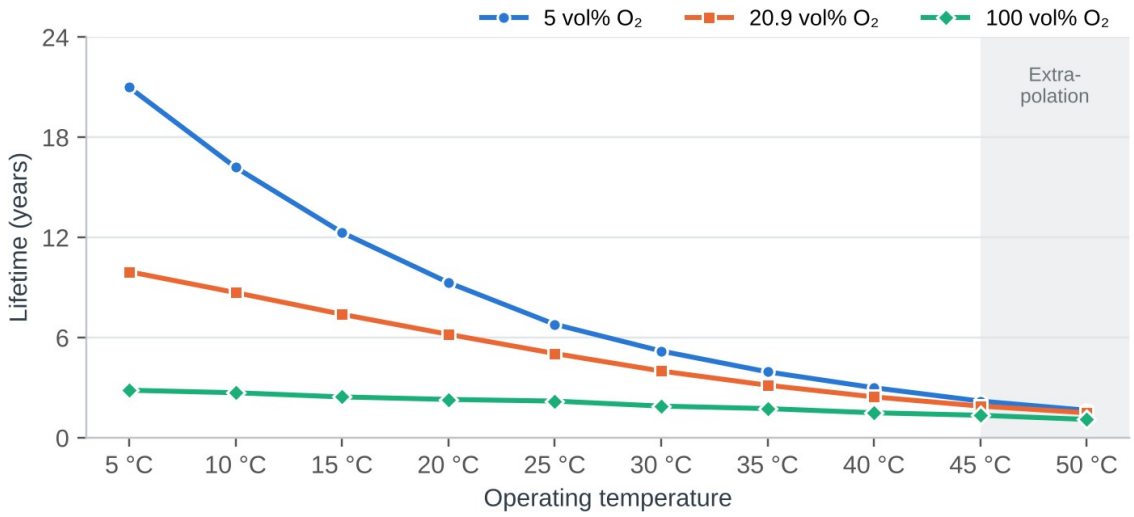

Figure 13: Estimated service life of the O2.sens: influence of temperature and O_2 concentration at 50 % RH

The curves shown are intended for comparative evaluation of different operating conditions. The underlying model parameters have not been validated by specific service life tests of the sensor.

The service life values given are non-binding guide values and do not represent a guaranteed minimum service life.

NOTICE

Operating temperature of the O2.sens

The recommended operating temperature range is 15 to 25 °C. The specified maximum operating range is between 0 and 45 °C. Model values above 45 °C are purely mathematical extrapolations outside the manufacturer's specification and do not constitute approval for operation in this temperature range.

3.6.4 Mounting orientation

Install the O2.sens vertically with the sensing surface facing down. Only then does the cathode remain in contact with the electrolyte; air bubbles rise upward and do not distort the measured value. In a horizontal position, the signal fluctuates.

> **O2.sens mounting orientation**
> The O2.sens must always be installed vertically. In any other mounting orientation, the specified service life is no longer guaranteed, and measurement problems may occur.

3.7 P.sens corrosive (absolute pressure sensor 0–1.5 bar)

The P.sens corrosive measures the absolute gas pressure in the sample gas path. Using the measured pressure, the base board compensates for the influence of pressure on the concentration reading (Section 3.2.2). It is designed for corrosive sample gases and is integrated into the gas line of the module.

Its core is a piezoresistive absolute pressure sensor with integrated signal conditioning and a digital I²C interface. The measuring cell uses chip-in-oil technology: the laser-welded stainless steel housing is hermetically sealed and filled with silicone oil. The sensor sits in a stainless steel housing block (processline version) and is connected to the base board via an adapter board (P.sens connection, see Section 7.3).

3.7.1 Variants

Variant	Item no.	Gas connection
P.sens corrosive 0–1.5 bar, tubing	2003534	2 × angled screw-in fitting 405 6/4-M5 for 6/4 mm tubing
P.sens corrosive 0–1.5 bar, pipeable	2003521	2 × swivel fitting SERTO SO 52824-4-M5 for 4 mm OD pipe

Table 9: Variants of the P.sens corrosive

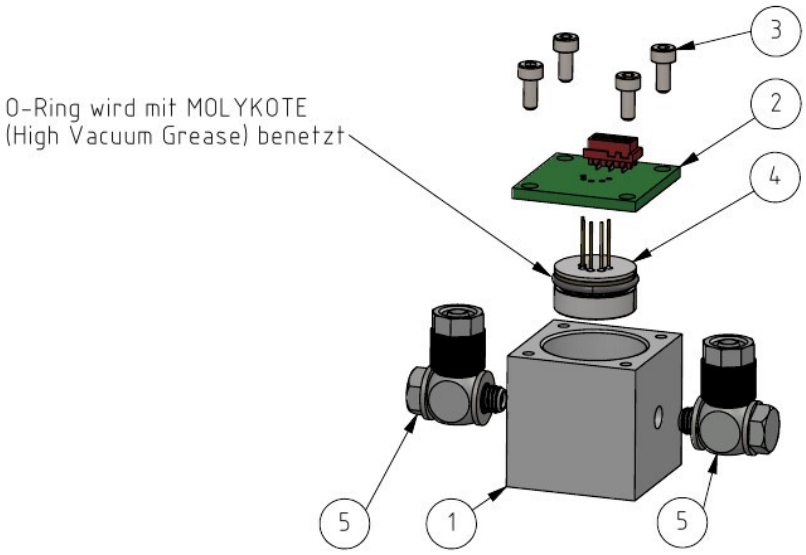

Figure 14: P.sens corrosive, variant for 6/4 mm tubing: 1 stainless steel housing block, 2 adapter board, 3 screws ISO 4762 M2.5 × 6, 4 pressure sensor (stainless steel), 5 angled screw-in fitting 6/4-M5

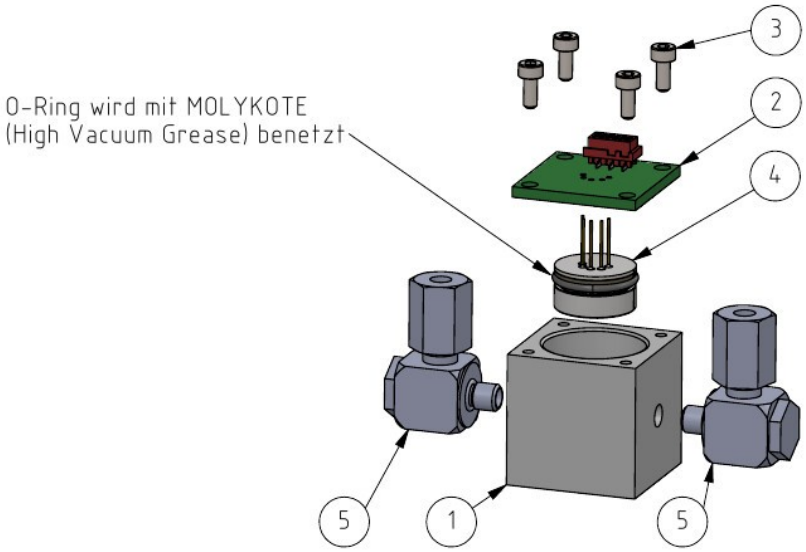

Figure 15: P.sens corrosive, pipeable variant: 1 stainless steel housing block, 2 adapter board, 3 screws ISO 4762 M2.5 × 6, 4 pressure sensor (stainless steel), 5 swivel fitting SERTO SO 52824-4-M5 for 4 mm pipe

3.7.2 Technical data of the pressure sensor

Feature	Value
Measuring principle	piezoresistive, chip-in-oil, silicone oil filling
Measuring range	0–1.5 bar absolute
Accuracy	max. ± 0.15 % of full scale (linearity, hysteresis, repeatability)
Total error band (TEB)	± 0.5 % of full scale (0–50 °C); ± 0.7 % of full scale (−10–80 °C)
Long-term stability	± 3 mbar (pressure ranges < 1.5 bar)
Overload pressure	4 × measuring range
Sensor operating temperature	−40–110 °C
Temperature measurement	integrated, typ. ± 2 °C
Interface	I²C, pressure and temperature as 16-bit values; conversion time typ. 6 ms
Power supply	1.8–3.6 V via the base board
Wetted materials	Housing block and fittings: stainless steel; sensor: stainless steel AISI 316L (1.4404 / 1.4435); O-ring: FKM (Viton®)
Load cycles / vibration / shock	> 10 million pressure cycles / 20 g (5–2,000 Hz) / 75 g (11 ms)

Table 10: Technical data of the pressure sensor

NOTICE

Damage to the seal

The O-ring between the pressure sensor and the housing block is coated with MOLYKOTE High Vacuum Grease. A dry or damaged seal leads to leakage.

- The pressure sensor may only be removed by trained personnel.
- Perform a leak test after every intervention (Section 6.6).

3.8 Products in preparation

The NO sensor (electrochemical), CALDO.sens® and MAGNO.sens® will be described in a later revision of this manual.

3.9 Nameplate and channel assignment

Each module bears a nameplate. It states the item number, serial number, device ID and, for each gas channel Ch1 to Ch4, the gas and measuring range. You need the serial number to connect to the PC software and for service requests.

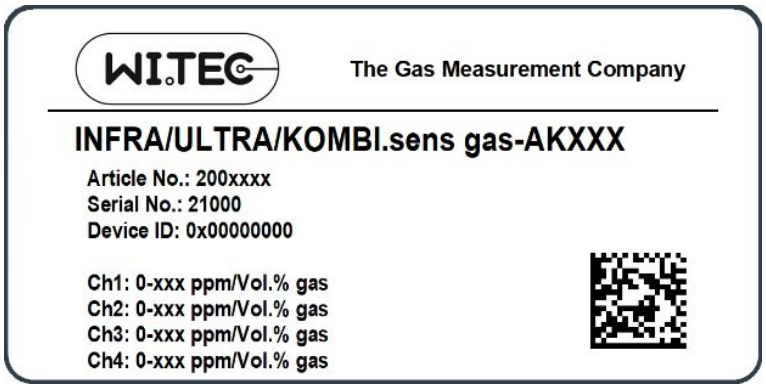

Figure 16: Nameplate (example)

4 Versions

4.1 Mounting plate

The optical bench and base board are mounted on a mounting plate made of anodized aluminum. The plate has 6 holes for M4 screws.

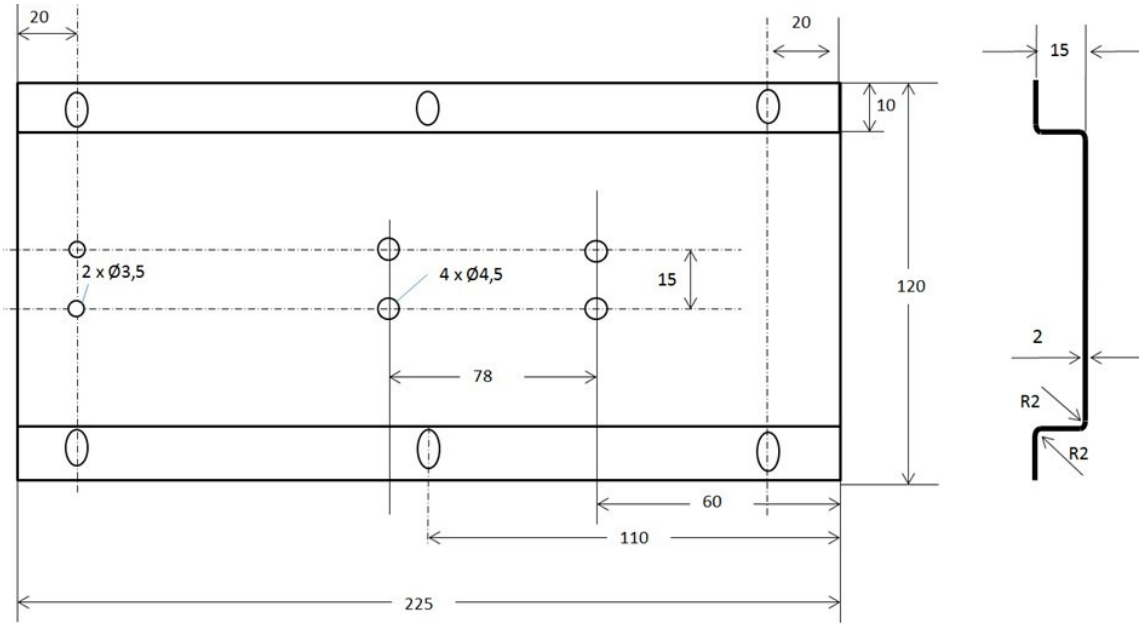

Figure 17: Dimensions of the mounting plate

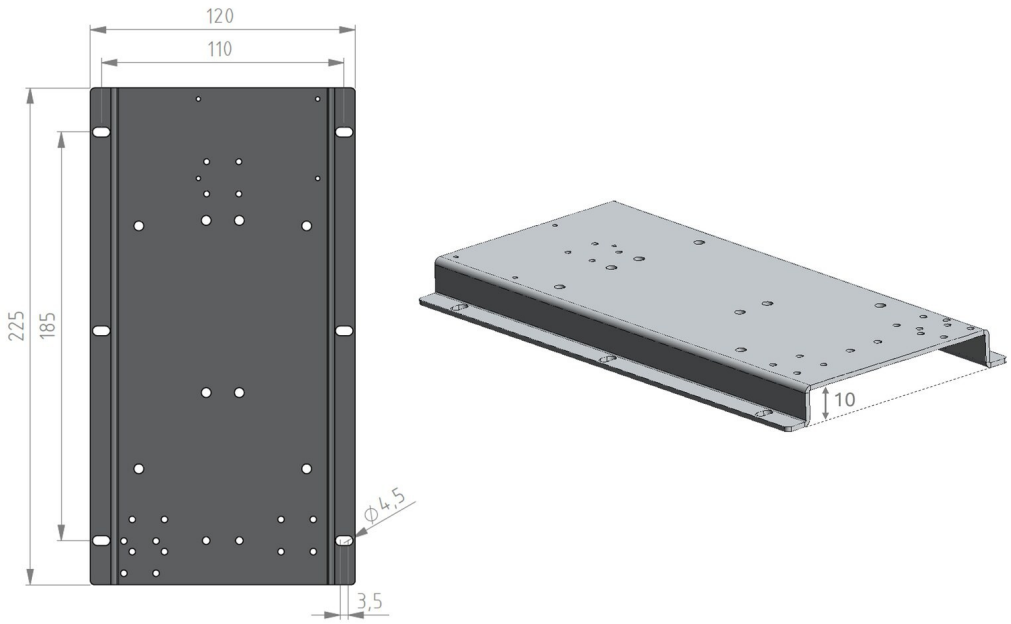

Figure 18: Holding plate (drawing)

4.2 Thermobox V5

The Thermobox is a heat-insulating housing for the gas measurement module. It can optionally be heated and temperature-controlled up to 55 °C. With heating, it requires a 24 VDC (15–30 V) power supply of at least 2 A.

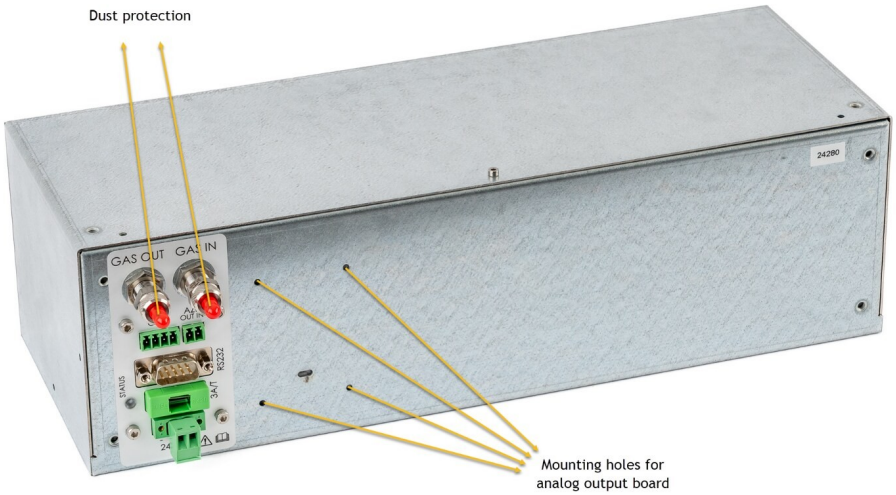

Figure 19: Thermobox V5

The electrical connections of the Thermobox V5 and their pin assignment are described in Sections 7.3.5 and 7.3.6.

Fuse: For replacement, use only fuse link ESKA 522.022, 3.15 A, 250 V.

4.2.1 Gas connections

Version	External gas connection	Internal gas routing
Standard	Stainless steel connections for 4/6 mm tubing	FKM tubing
Piped (option)	SERTO screw-in fitting SO 51124-4-M5 for 4 mm OD stainless steel pipe	Stainless steel piping

Table 11: Gas connections of the Thermobox V5

Feature	SERTO SO 51124-4-M5
Design	straight screw-in fitting METR
SERTO item no.	058.1143.080
Pipe outer diameter	4 mm
Screw-in thread	M5 (metric, parallel)
Union nut thread	M8 × 1.0
Wrench sizes	WS 10 / WS 8
Nominal pressure	PN 200 bar
Material	stainless steel 1.4571

Table 12: Technical data of the SERTO fitting (piped version)

Information

When installing the SERTO fitting, the manufacturer recommends a sealing washer (e.g. SO 40507 METR); it must be ordered separately.

4.2.2 Dimensions and hole pattern

The Thermobox V5 is available for horizontal and vertical installation. M4 threaded holes (max. 4 mm thread depth) are provided for mounting at the customer site.

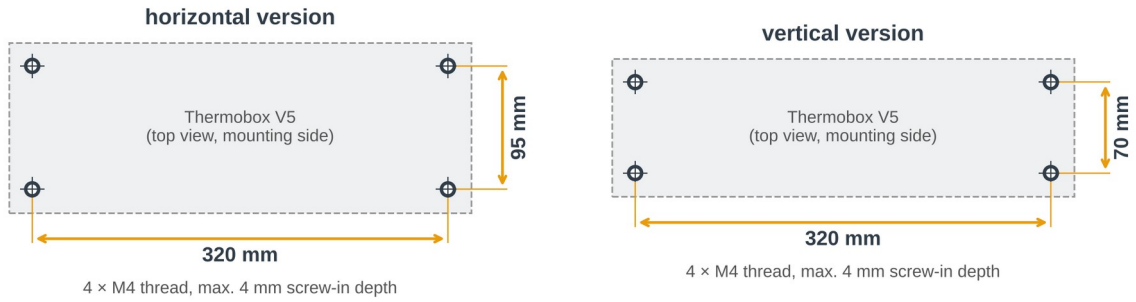

Figure 20: Hole pattern of the Thermobox V5: hole spacing 95 × 320 mm (horizontal version) and 70 × 320 mm (vertical version), 4 × M4 each

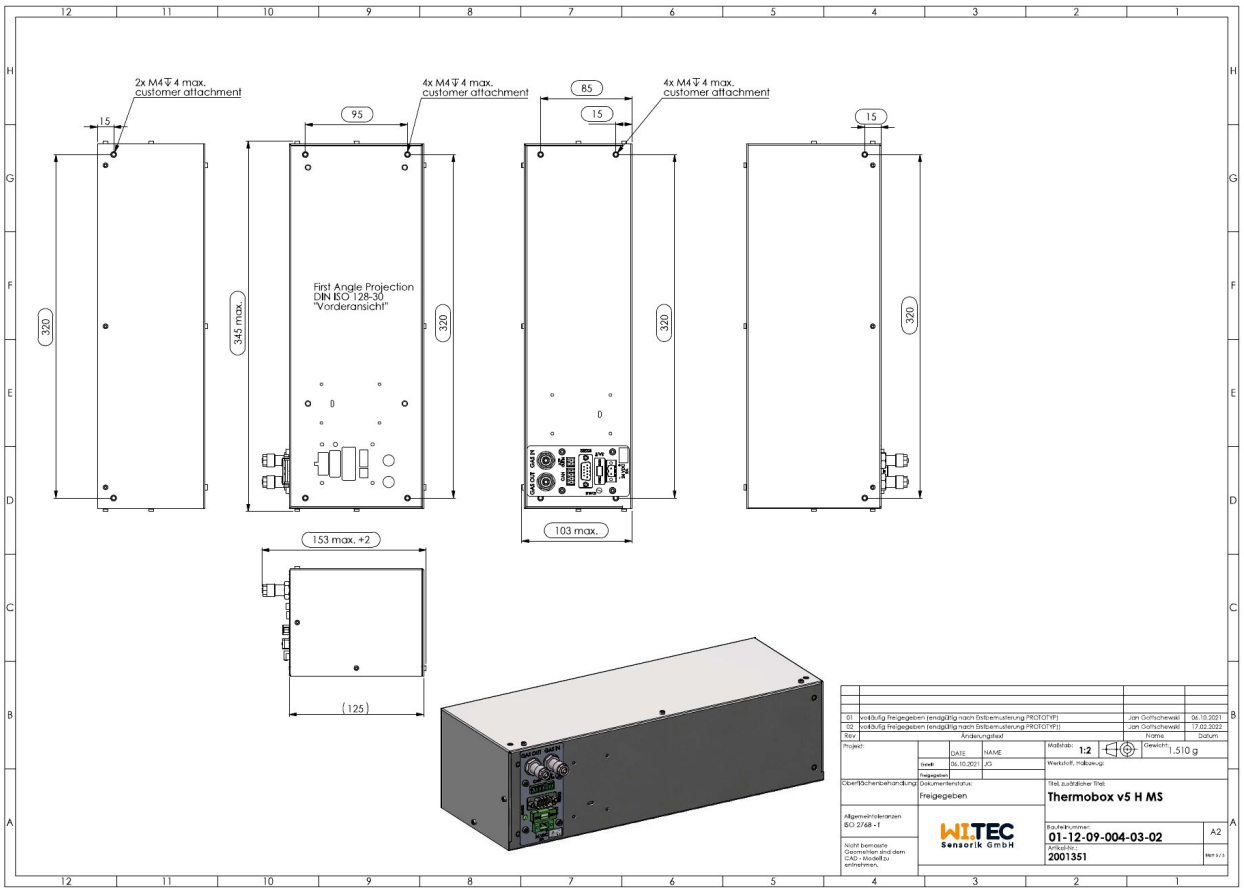

Figure 21: Dimensions and hole pattern of Thermobox V5, horizontal version

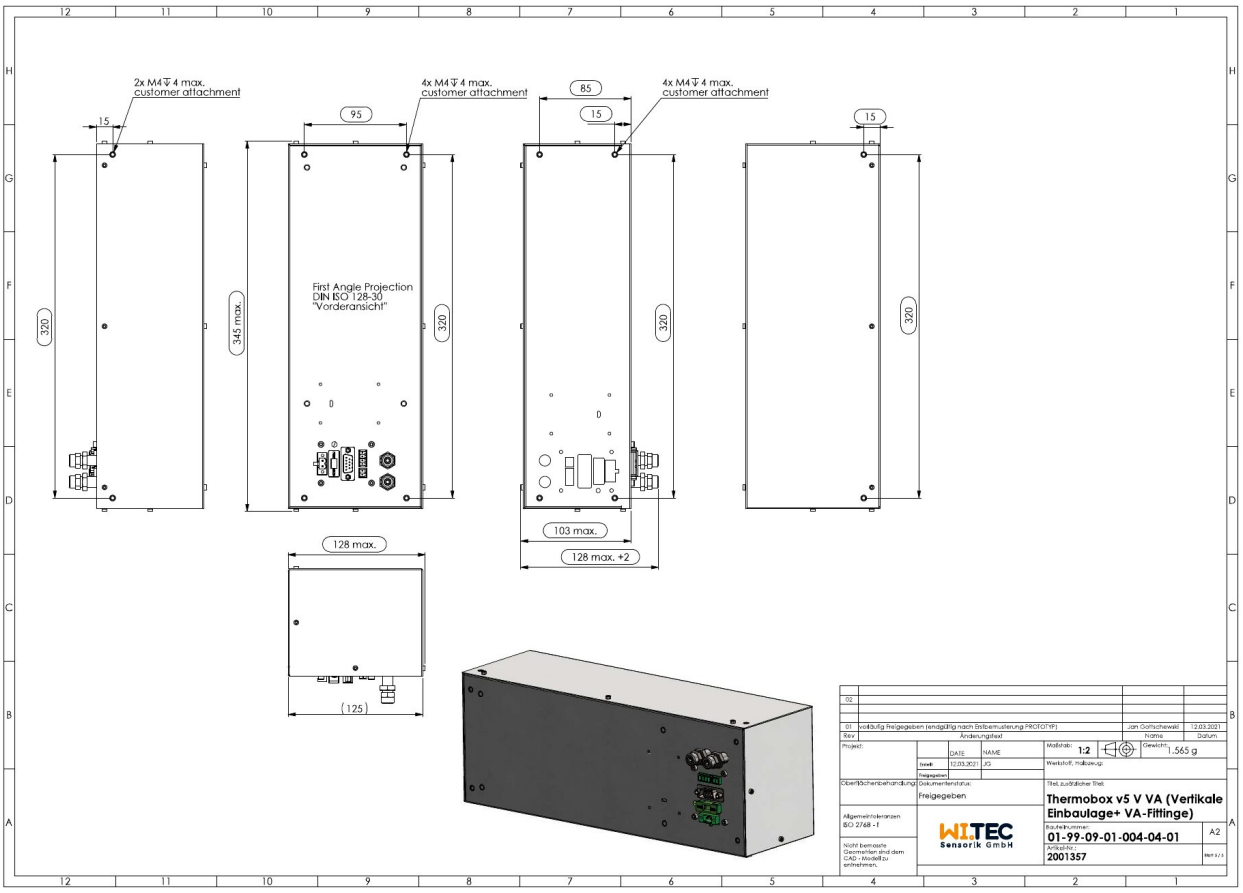

Figure 22: Dimensions and hole pattern of Thermobox V5, vertical version

NOTICE

Opening the Thermobox

Opening destroys the Wi.Tec seals; the warranty becomes void unless otherwise agreed.

▶️ The Thermobox may only be opened by trained personnel in accordance with the service instructions and only in a dust-free environment.

4.3 Temperature control

A stable module temperature improves measuring accuracy. Ideally, the environment or the module itself is kept at approx. 40–50 °C, e.g. with the heated Thermobox or the optional factory-installed module heater.

The optical bench (emitter, cell, detector) should have no contact with other components except via the mounting plate, e.g. housing walls, cables or heat sources. Such contacts conduct heat away or in, create temperature differences along the optical bench and can lead to measured value drift.

The heating power varies depending on the module and cell:

Module / cell	Heating power
INFRA.sens AK2, AK5	max. 10 W
INFRA.sens AK20	30 W
INFRA.sens AK100G, AK250G	30 W
ULTRA.sens NOx/SO_2 in the Thermobox (TBH)	30 W

Table 13: Heating power of the module heater

The warm-up time until the setpoint temperature is reached is approx. 30 minutes at a starting temperature of 25 °C. At a lower starting temperature, it is extended accordingly.

Heater and heater controller are a factory option of the module. They are installed and set at the factory and cannot be ordered separately.

4.4 Corrosion-resistant version (processline)

The processline version is available for the INFRA.sens (IR) and the ULTRA.sens (UV). It is intended for corrosive sample gases. The analysis cell and gas connections are made entirely of stainless steel 1.4571; the abbreviation "VA" in the cell designation stands for the stainless steel version. Other materials on request.

Cell	Length	Version / resistance
AK25VA	25 mm	Stainless steel 1.4571; optionally with Silcolloy® 2000 (H_2S-resistant up to 5 vol%) or SilcoNert® 2000 (SO_2-resistant up to 20 vol%)
AK50VA	50 mm	Stainless steel 1.4571; optionally with SilcoNert® 2000 (SO_2-resistant up to 20 vol%)
AK100VA	100 mm	Stainless steel 1.4571
AK200VA	200 mm	Stainless steel 1.4571; ULTRA.sens only

Table 14: Common processline cells

All processline cells are available with two gas connection types, both made of stainless steel:

- direct tubing connection 4/6 mm
- pipe connection for 4 mm OD pipe (SERTO fitting)

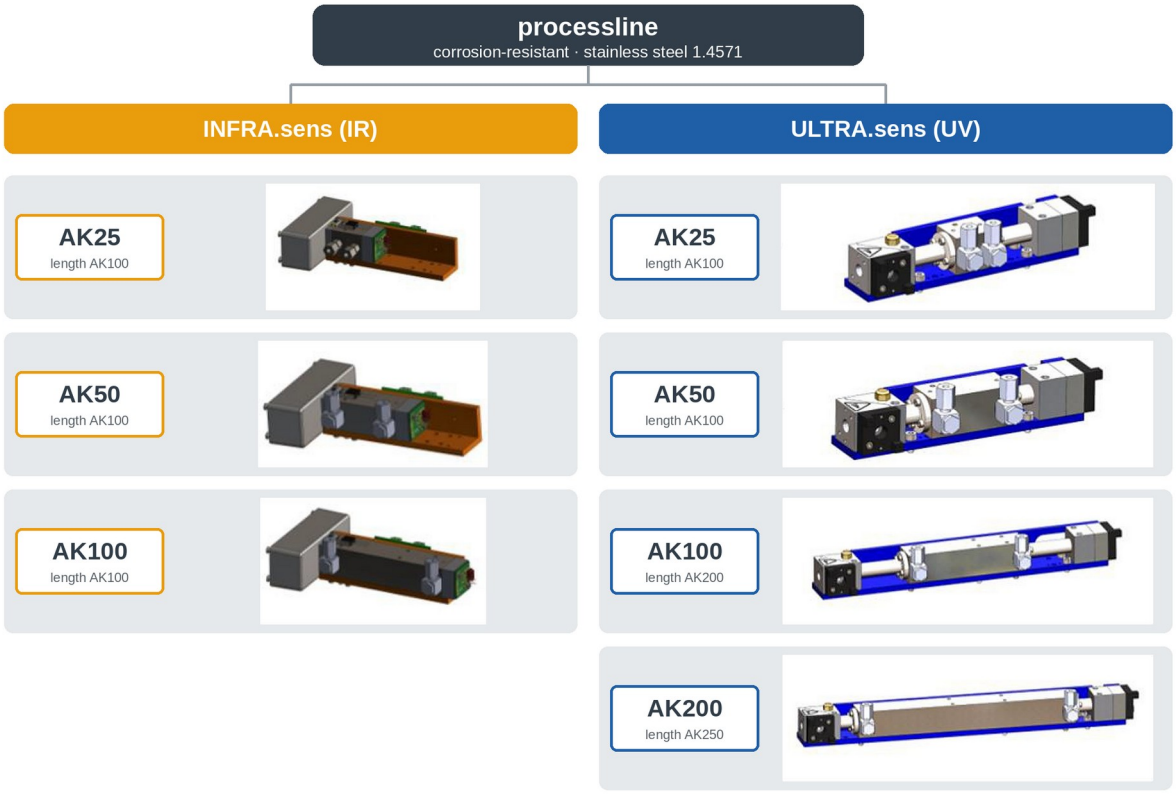

Figure 23: Overview of processline versions for INFRA.sens (IR) and ULTRA.sens (UV)

4.5 Base boards

Depending on module type and date of purchase, your gas measurement module is equipped with one of the following base boards. The revision is printed on the circuit board.

Base board	Power supply	Identifying features	Use
V1.8.x	15–30 VDC	RS232 via 10-pin header (CON3); external zero trigger from V1.8.2	older modules
V1.9.x	15–30 VDC	RS232 via 9-pin D-sub socket (CON3); CAN via RJ45 (X1/X4) and 4-pin (X2/X3)	ULTRA.sens, KOMBI.sens, Thermobox
IR-compact V2.0.x	9–30 VDC	compact circuit board, connectors as 2.54 mm pin headers, labeling directly on the board	INFRA.sens compact

Table 15: Overview of base boards

Photos of the base boards showing the location of all connectors can be found in Section 7.3.

5 Installation

5.1 Ambient Conditions

Parameter	Requirement
Ambient temperature	5–45 °C, as constant as possible
Relative humidity	< 95 %, non-condensing
Environment	dry, dust-free, no aggressive atmosphere, not outdoors without a protective enclosure
Explosion protection	non-hazardous areas only

Table 16: Ambient conditions for operation

5.2 Mounting

Prerequisite: The installation site meets the ambient conditions; the module is acclimatized (Section 2.3).

1. Securely fasten the module with 6 M4 screws through the holes in the mounting plate (dimensions: Section 4.1).
2. Install the module so that the optical bench (emitter, cell, detector) touches no other components except via the mounting plate (e.g., enclosure walls, cables, heat sources) and is not exposed to vibration. Contact conducts heat to or from the bench and can cause measured-value drift (Section 4.3).
3. Define the mounting orientation and do not change it after installation.
4. Align the O2.sens vertically with the sensing surface facing down (Section 3.6).
5. Connect the gas lines (Section 6), then make the electrical connections (Section 7).

✔ **Result:** The module is mechanically secured and ready for gas connection.

Information

The mounting orientation can shift the zero point. Perform a zero-point adjustment after installation (Section 10.4).

6 Gas Connection

6.1 Tubing and Pipes

The gas connections are designed for flexible tubing with 4 mm inner and 6 mm outer diameter. Use tubing made of Viton or PTFE (Teflon).

NOTICE

Measuring water vapor (H_2O)

Tubing made of other materials, e.g., Viton (FKM), is permeable to water vapor. Through diffusion across the tubing wall, ambient humidity falsifies the measured value – especially at low H_2O concentrations.

▶ Measure water vapor only with PTFE tubing or stainless steel piping.

NOTICE

Modified gas connections

After removal or replacement of the fittings, Wi.Tec-Sensorik no longer guarantees operation according to specification.

▶ Do not modify the fittings.

▶ Request customer-specific gas connections from Wi.Tec sales.

For piping with stainless steel tube (4 mm outer diameter), the Thermobox V5 is available as a piped option with SERTO fittings (Section 4.2.1).

6.2 Flow Direction

On all modules, the gas inlet is on the detector side: on the right for the ULTRA.sens, on the left for the INFRA.sens. The gas outlet is on the emitter side.

The flow direction has no significant influence on measurement accuracy. For reproducible results, however, it is fixed: the module is calibrated in this direction. Therefore, always connect the sample gas as described and maintain this direction, including during adjustment and span gas application.

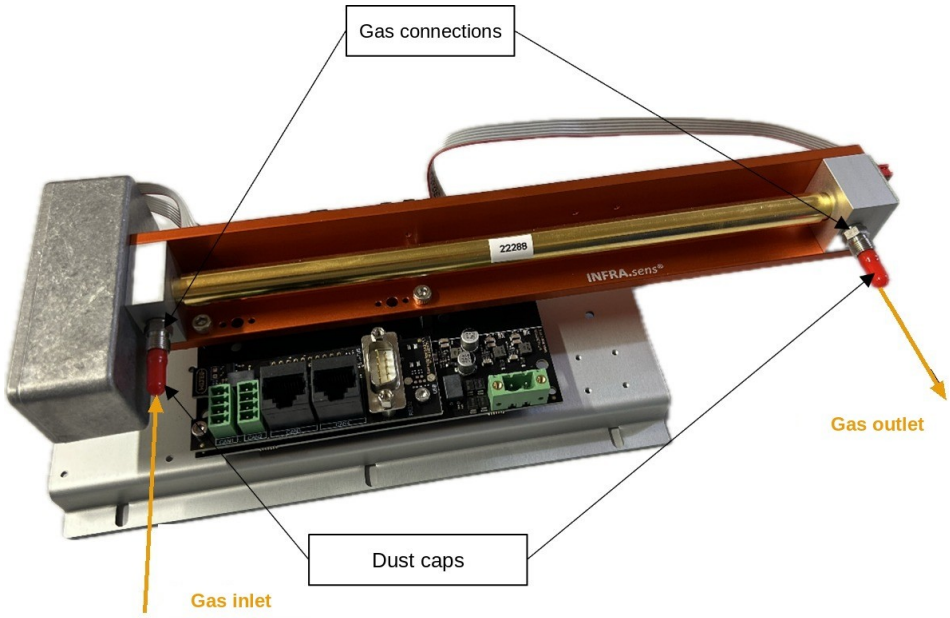

Figure 24: INFRA.sens: gas inlet on the detector side (left), gas outlet on the emitter side (right); gas connections with dust caps

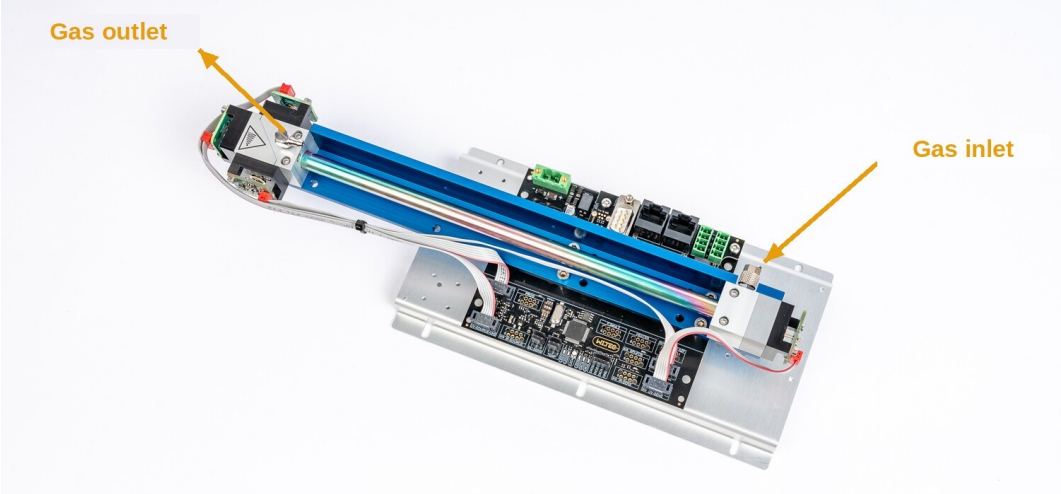

Figure 25: ULTRA.sens: gas inlet on the detector side (right), gas outlet on the emitter side (left)

6.3 Flow Rate

Parameter	Value
Permissible flow rate	0.1–1.5 l/min
Flow rate during factory calibration	0.7–1 l/min
Flow rate for adjustment	1 l/min (Section 10)

Table 17: Sample gas flow rate

Keep the flow rate as constant as possible. Use pumps without pressure pulsation and avoid fluctuating back pressure at the gas outlet. If the operating flow rate differs from the calibration flow rate, adjust zero and span at the operating flow rate.

6.4 Sample Conditioning

- Dry the sample gas: dew point below 5 °C, e.g., with an electric sample gas cooler or Nafion™ tubing. Humidity must be stable.
- Filter particles: filter rating < 0.1 µm, e.g., membrane filter. Check and replace filters regularly.
- Keep pressure stable: within specification, without fluctuations.

Further information on sample gas cooler, filter, and flow meter is provided in Appendix A.

6.5 Tubing Length and Response Behavior

Gases such as SO_2 and NO_2 adhere to surfaces. This causes delayed response and decay (hang-up effect). Use Viton or PTFE tubing, keep lines short, and during adjustments wait long enough for the measured value to stabilize.

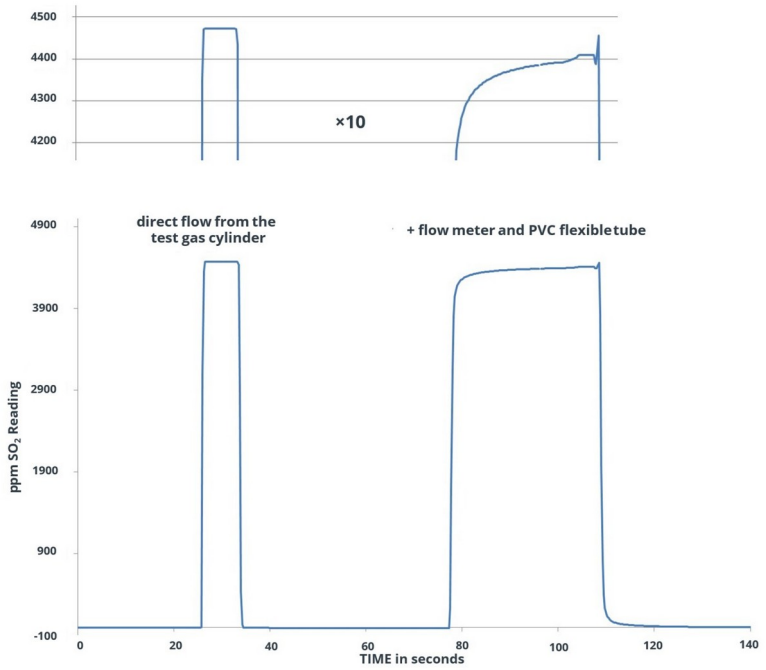

Figure 26: Response behavior with direct gas application from the span gas cylinder (left) and via flow meter and PVC tubing (right)

Every meter of line increases the dead time, i.e., the time until a concentration change at the start of the line reaches the module. The dead time results from line volume and flow rate: $t = \pi \cdot (d/2)^2 \cdot L / Q$. At 4 mm inner diameter, each meter of tubing contains 12.6 ml of gas; at 1 l/min this corresponds to approx. 0.75 s dead time per meter.

Tubing length (m)	Line volume (ml)	Dead time at 1 l/min (s)
1	12.6	0.8
2	25.1	1.5
3	37.7	2.3
4	50.3	3.0
5	62.8	3.8
6	75.4	4.5

Tubing length (m)	Line volume (ml)	Dead time at 1 l/min (s)
7	88.0	5.3
8	100.5	6.0
9	113.1	6.8
10	125.7	7.5
15	188.5	11.3
20	251.3	15.1
30	377.0	22.6
50	628.3	37.7

Table 18: Dead time as a function of tubing length (inner diameter 4 mm, flow rate 1 l/min)

Information

The values apply to ideal plug flow. The actual response time (t90) is longer: the volume of filter, cooler, and cell as well as mixing and adhesion of the gas to the tubing wall add to it.

The dead time is inversely proportional to the flow rate: at 0.5 l/min it doubles, at 1.5 l/min it drops to two thirds.

6.6 Leak Test

Every gas measurement module is leak-tested at Wi.Tec-Sensorik in two stages: once during assembly and a second time before shipment. Both tests are performed with the automated leak test device.

Regular leak rate testing during operation is not strictly necessary. A leak test is recommended after connection, after mechanical changes to the gas path, and after extended downtime. Limit: pressure drop < 1 mbar/min at 250 mbar overpressure. Nitrogen (N_2) of purity 5.0 is recommended as test gas.

Prerequisite: Gas supply switched off, gas path purged.

1. Seal the gas outlet tightly.
2. Connect nitrogen 5.0 to the gas inlet via pressure regulator, shut-off valve, and pressure gauge. Alternatively, a hand pump with pressure gauge can be used, e.g., a manual blood pressure monitor.
3. Pressurize the gas path to 250 mbar overpressure and shut off the supply.
4. Observe the pressure drop over 1 minute.
5. If there is a leak, check the fittings and repeat the test.
6. Remove the seals and reconnect the gas lines.

✔ **Result:** The pressure drop is below 1 mbar/min. The gas path is leak-tight.

Information

For questions about leak testing at the customer site, Wi.Tec support will assist you (contact in Section 13).

6.7 Exhaust Routing

For toxic, aggressive, or flammable sample gases, route the exhaust gas through an exhaust line or extraction system (Section 1.5). The exhaust line must not generate fluctuating back pressure.

7 Electrical Connection

NOTICE

Incorrect supply voltage or reverse polarity

The base board can be destroyed.

- ▶ Check voltage and polarity before switching on.
- ▶ Connect the interfaces first, then switch on the power supply.

7.1 Power Supply

Version	Supply	Current consumption	Power
ULTRA.sens (base board V1.9.2)	24 VDC (15–30 V)	< 100 mA	< 3 W
INFRA.sens	24 VDC (range depends on base board)	< 300 mA	< 9 W
KOMBI.sens	24 VDC (15–30 V)	< 400 mA	< 12 W
Thermobox V5 with heating	24 VDC (15–30 V)	min. 2 A	35 W

Table 19: Supply and current consumption

Connector: base board V1.9.x X5 (Würth 691352710002, 5 mm, 2-pin); IR-compact V2.0.x (Würth 691304100002, 3.5 mm, 2-pin). Pin 1 = UB+, pin 2 = UB−. 24 VDC plug-in power supplies (60 W, 100–240 VAC) are available as accessories: Item no. 2003262 for base board V1.8.x, V1.9.x, and Thermobox, Item no. 2003137 for IR-compact V2.0.x (Section 14.3).

7.2 Grounding

The gas measurement modules are operated floating (potential-free):

- Do **not** connect enclosure parts and metallic parts of the modules to the protective earth conductor (PE).
- Supply the modules via a **galvanically isolated power supply**.
- Do **not** connect the supply line UB− to the GND line of a communication interface (RS232, CAN, Modbus).

NOTICE

Connection of UB− to GND of the communication interface

If UB− and the interface GND are connected outside the module, equalizing currents flow. The input circuitry of the power supply is then partially bypassed.

- ▶ Wire UB− and interface GND separately.
- ▶ Use only galvanically isolated power supplies.

D-sub 9 (DE-9) pin numbering

Contacts are numbered as seen from the mating side: the wide row holds pins 1 to 5, the narrow row pins 6 to 9. On the male connector (pins), count from left to right; on the female connector (socket), count mirrored from right to left. The numbers are usually molded in small print into the insulator.

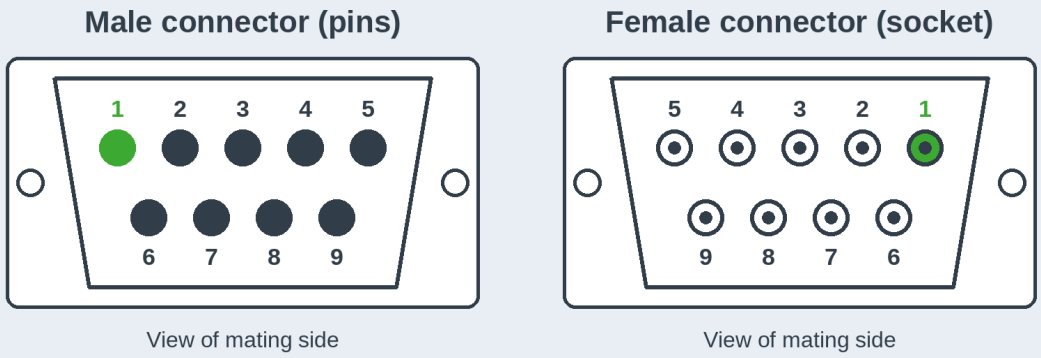

When mated, identical pin numbers meet (pin 1 to pin 1). If the connector is mounted rotated by 180° (wide row at the bottom, as on the Thermobox V5), pin 1 of the male connector is at the bottom right. Refer to the tables of the respective interface for the device-specific pin assignment.

7.3 Base Board Interfaces

7.3.1 Base Board V1.9.x

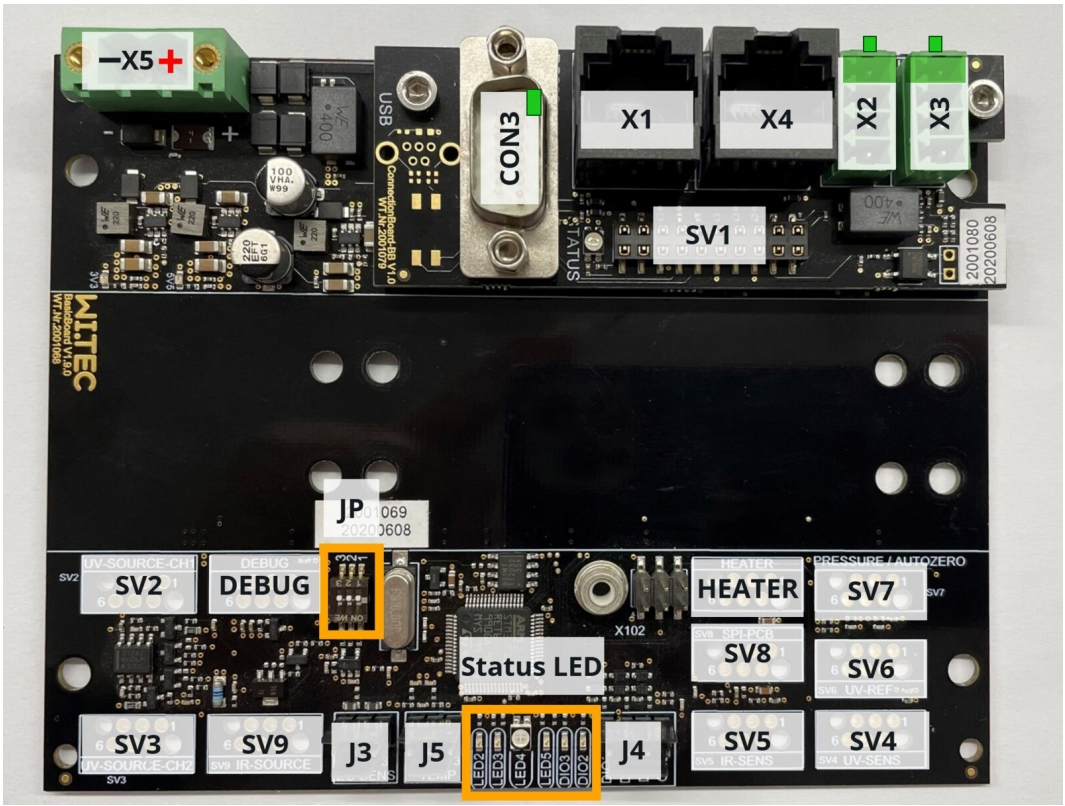

Figure 27: Base board V1.9.x – connector locations (pin 1 marked in green)

Connection	Function	Assignment / note
X5	Power supply	15–30 VDC; pin 1 UB+, pin 2 UB−
CON3	RS232	D-sub 9-pin female, 115,200 baud; pin 2 TxD (output), pin 3 RxD (input), pin 5 GND
X1, X4	CAN bus (RJ45)	Pin 1 GND, pin 4 CAN-H, pin 5 CAN-L; two sockets in parallel for daisy-chaining
X2, X3	CAN bus (4-pin, 3.5 mm)	Pin 1 GND, pin 2 CAN-L, pin 3 CAN-H
J3	Electrochemical sensor input (O2.sens)	Pin 1 signal, pin 2 GND, pin 3 GND filter
J4	Digital inputs/outputs	Pin 1 DIO1 external zero-point trigger (min. 4 s low), pin 2 DIO2 not assigned, pin 3 DIO3 AZF output, pin 4 GND (Section 7.7)
J5	External PT1000 (2-wire)	Pin 1 PT1000_1, pin 2 GND, pin 3 PT1000_2
SV7	Pressure/humidity sensor, AZF	P.sens, HUMI.sens, AZF control
SV8	Analog output (option)	for analog output board (Section 14.2)
JP (DIP switch)	O2 sensor configuration	for O2.sens: switch 1 = 0, 2 = 1, 3 = 0
DEBUG	Programming interface	Firmware update; request cable from Wi.Tec

Table 20: Connections base board V1.9.x

7.3.2 Base Board IR-compact V2.0.x

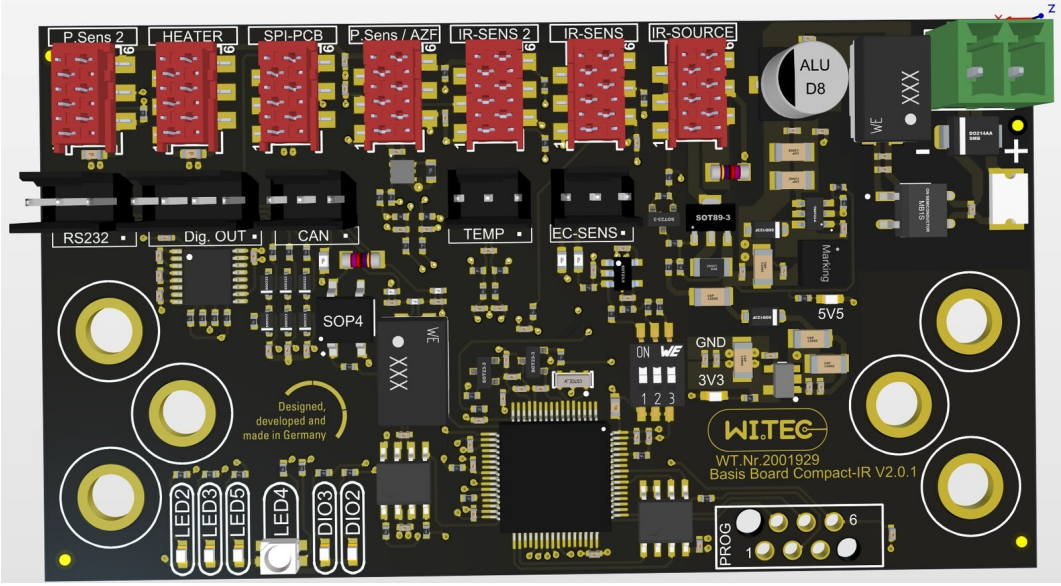

Figure 28: Base board IR-compact V2.0.x – the connectors are labeled directly on the PCB

Connection	Function	Assignment / note
Power	Power supply	9–30 VDC, 3.5 mm, 2-pin; pin 1 UB+, pin 2 UB−
RS232	RS232 (2.54 mm, 3-pin)	Pin 1 RxD (input), pin 2 TxD (output), pin 3 GND

Connection	Function	Assignment / note
CAN	CAN bus (2.54 mm, 3-pin)	Pin 1 CAN-L, pin 2 CAN-H, pin 3 GND
Dig.OUT	Digital inputs/outputs (2.54 mm, 4-pin)	Pin 1 DIO1 external zero-point trigger (min. 4 s low), pin 2 DIO2 reserved, pin 3 DIO3 AZF output, pin 4 GND (Section 7.7)
TEMP	External PT1000 (2-wire)	Pin 1 PT1000_1, pin 2 GND, pin 3 PT1000_2
EC-SENS	Electrochemical sensor input	Pin 1 signal, pin 2 GND, pin 3 GND filter
P.sens/AZF, P.sens2	Pressure/humidity sensor, AZF	P.sens2 = optional second pressure sensor
SPI-PCB	Analog output (option)	0–10 V / 0–5 V / 0–2 V
DIP switch	EC sensor configuration	for external EC sensor: switch 1 off, 2 on, 3 off
PROG	Programming interface	Firmware update; request cable from Wi.Tec

Table 21: Connections base board IR-compact V2.0.x

7.3.3 Base Board V1.8.x

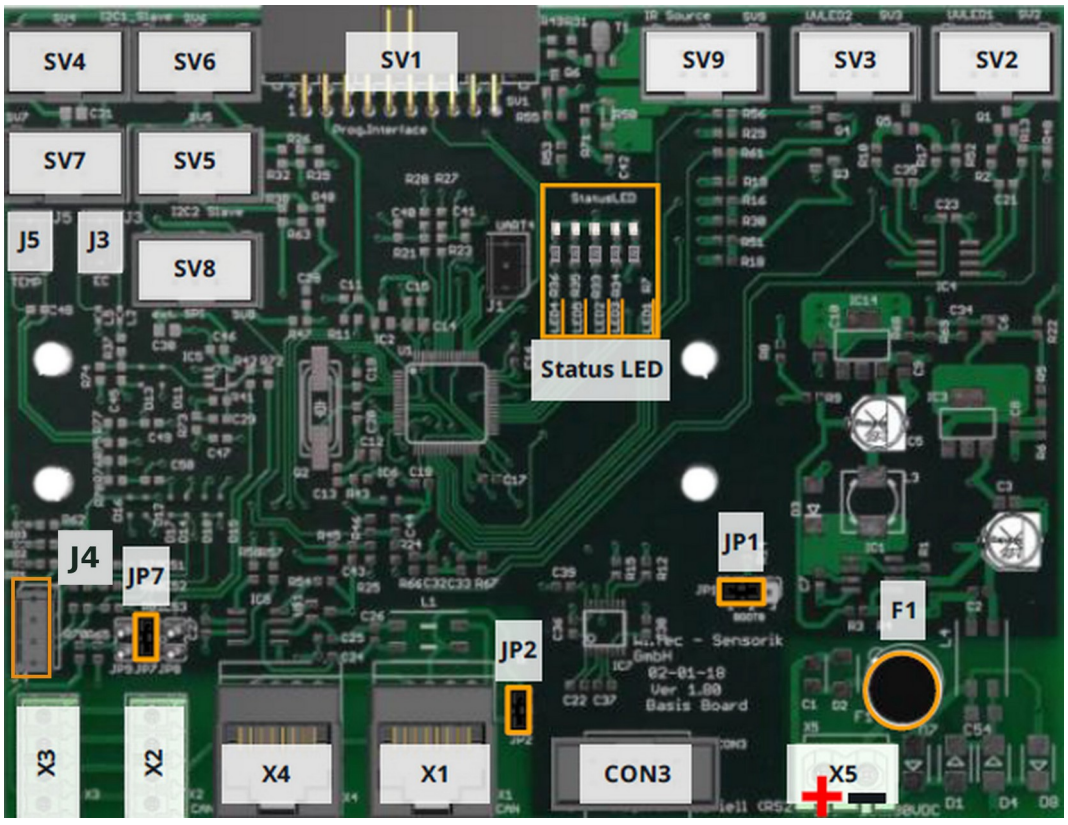

Figure 29: Base board V1.8.x – connector locations

Connection	Function	Assignment / note
X5	Power supply	15–30 VDC; pin 1 UB+, pin 2 UB−
CON3	RS232	10-pin header (Würth 61201023021, 2.54 mm), 115,200 baud; pin 3 TxD, pin 5 RxD, pin 8 +3.3 V, pin 9 GND

Connection	Function	Assignment / note
X1, X4	CAN bus (RJ45)	Assignment as base board V1.9.x
X2, X3	CAN bus (4-pin)	Assignment as base board V1.9.x
J3	Electrochemical sensor input (O2.sens)	Pin 1 signal, pin 2 GND, pin 3 GND filter
J4 (from V1.8.2)	Digital inputs/outputs	Pin 1 DO1, pin 2 DO2, pin 3 DI1 zero-point trigger (min. 4 s to GND), pin 4 GND
J5	External PT1000 (2-wire)	Pin 1 PT1000_1, pin 2 GND, pin 3 PT1000_2
SV1	Programming interface (ST-LINK)	3.3 V, GND, RESET
SV2, SV3	UV LED 1 / UV LED 2	Control of the UV radiation sources
SV4	UV detector board	Measuring channel
SV5, SV6	UV/IR detector board	Measuring channels
SV7	Pressure/humidity sensor (option)	Input P.sens / HUMI.sens
SV8	Analog output (option)	Analog output board 0–10 V / 0–5 V / 0–2 V
SV9	IR emitter	Pin 1 control, pin 2 GND, pin 3/5 V_Lampe+, pin 4/6 V_Lampe−
JP1	Jumper	–
JP2	Jumper	Enables the 120 Ω CAN bus termination
JP7	Jumper	required for O2 sensor
F1	Fuse	Subminiature fuse, round, slow-blow (T), 1 A, e.g., ESKA 887.100

Table 22: Connections base board V1.8.x

LED	Meaning
LED1	3.3 V supply
LED2	System clock, flashes at 1 Hz
LED3	I²C communication with sensors
LED4	not assigned
LED5	RS232 communication

Table 23: Status LEDs base board V1.8.x



Information

On base board V1.8.x the zero-point trigger is on J4 pin 3 (DI1); on V1.9.x and IR-compact V2.0.x it is on pin 1 (DIO1).

7.3.4 Connector Board MBB V1.0 (Modbus, without Thermobox)

Modules with the Modbus option without Thermobox are equipped with the Connector Board MBB V1.0. It provides the Modbus RTU interface (RS485) via two RJ45 sockets and the RS232 interface via a D-sub socket.

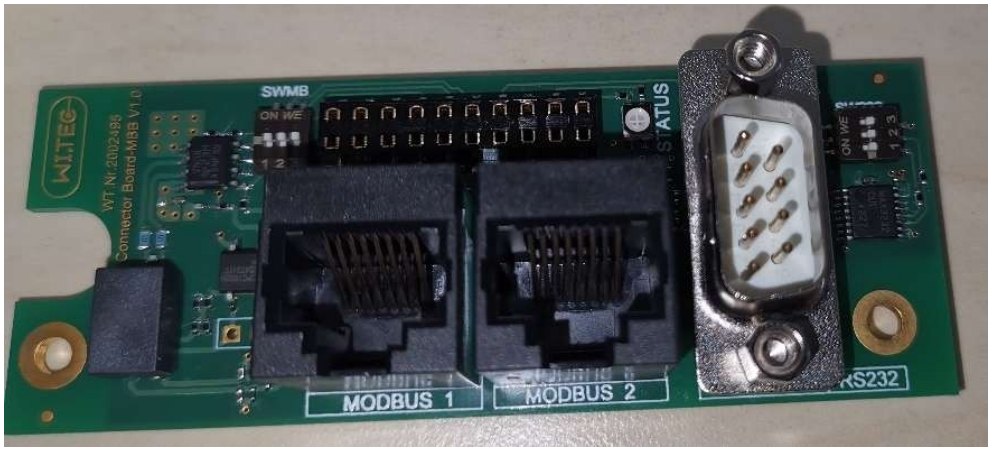

Figure 30: Connector Board MBB V1.0 with the RJ45 sockets MODBUS 1 and MODBUS 2, the RS232 socket, and the DIP switches SWMB and SW232

The two RJ45 sockets MODBUS 1 and MODBUS 2 are connected in parallel. This allows two analyzers to be connected with a standard patch cable; the controller (PLC) is connected via the free socket.

Pin (RJ45)	RS485 signal
1, 2, 3	not assigned
4	D1 (A+)
5	D0 (B−)
6	not assigned
7	5 VDC – do not connect
8	Common

Table 24: Pin assignment of the RJ45 sockets MODBUS 1 and MODBUS 2

Pin (D-sub 9)	RS232 signal
2	TxD (output)
3	RxD (input)
5	GND (interface)
1, 4, 6–9	not assigned

Table 25: Pin assignment of the RS232 socket (D-sub 9-pin, female)

RS232/Modbus switchover: The board has two DIP switches, SWMB (SW1) for Modbus and SW232 (SW2) for RS232. The module detects the switch setting at every power-up and communicates using the corresponding protocol.

Operating mode	SWMB (SW1), pos. 1–3	SW232 (SW2), pos. 1–3
Modbus	all ON	all OFF
RS232	all OFF	all ON

Table 26: DIP switches for interface selection

Bus termination: For cable lengths of approx. 30 m or more, a termination resistor is recommended to avoid reflections. The termination resistor integrated on the board (150 Ω) is enabled with jumper JP1 or via RS232.

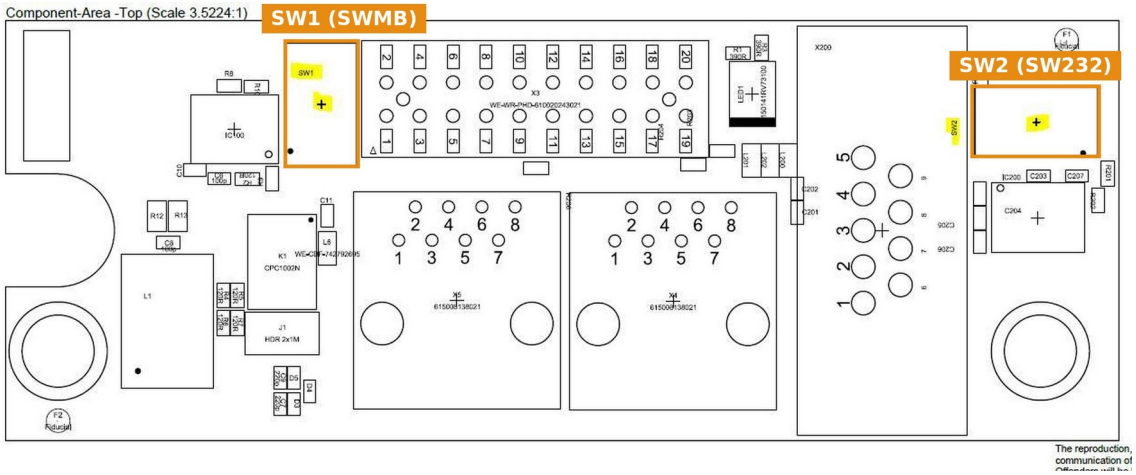

Figure 31: Component layout Connector Board MBB V1.0 with the DIP switches SW1 (SWMB, Modbus) and SW2 (SW232, RS232)

Information

Factory Modbus address: 1. It can be changed via RS232 with the MARS® Tool or via Modbus (parameter “Slave ID Update”); then restart the module.

Baud rate (9.6 to 115.2 kBd) and parity are set by Wi.Tec during production.

7.3.5 Thermobox V5

For modules in the Thermobox V5, power supply and communication are provided via the connection panel on the enclosure.

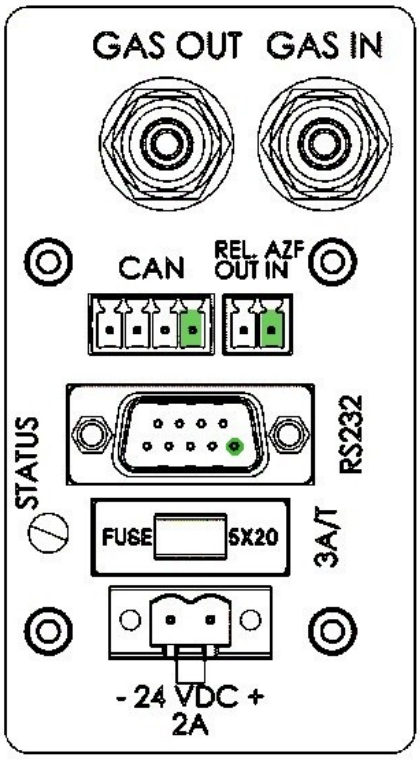

Figure 32: Connection panel of the Thermobox V5 (pin 1 marked in green)

Information

Pin numbering: on the CAN and REL. AZF/Pump connectors, pin 1 is on the right.

Connection	Pin	Signal	Connector
24 VDC	1	UB+ (+24 VDC, 15–30 V, min. 2 A)	Würth Elektronik 691352710002, 5 mm, 2-pin
	2	UB−	
RS232	2	TxD (output)	Würth Elektronik 618009221923, D-sub 9-pin, female
	3	RxD (input)	
	5	GND (interface)	
CAN	1	GND (interface)	Würth Elektronik 691366110004, 3.5 mm, 4-pin
	2	CAN-L	
	3	CAN-H	
REL. AZF/Pump	1	Load IN (load circuit CPC1002N, pin 4)	Würth Elektronik 691304100002, 3.5 mm, 2-pin
	2	Load OUT (load circuit CPC1002N, pin 3)	

Table 27: Pin assignment of the Thermobox V5 connections

REL. AZF/Pump: Relay output with a solid-state relay (CPC1002N). The module uses it to switch the auto-zero function, e.g., the variants with external 24 V control (AZF eVP, eVV, Section 14.1). In the standard version, both pins are connected to the load circuit of the relay; the connection acts like a switching contact, and the voltage for the load is supplied externally (max. 60 VDC, load current max. 700 mA). On the Thermobox with Modbus connection, the connection is called “AZF SW”; it is functionally identical but wired differently (Section 7.3.6).

Connection with 24 VDC supply (standard case): +24 VDC (UB+) is connected to Load IN (pin 1). The load, e.g., pump or valve, is connected between Load OUT (pin 2) and GND (UB−).

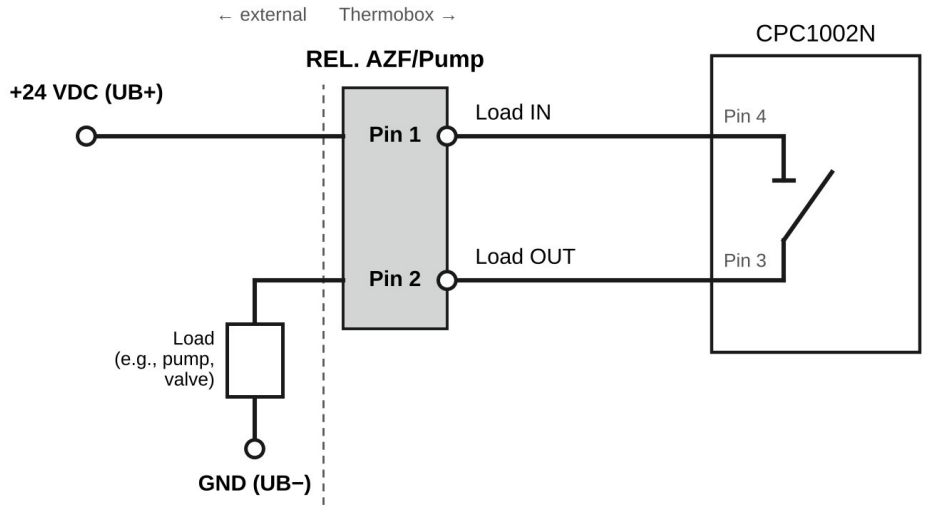

Figure 33: Relay output REL. AZF/Pump (Thermobox V5) with 24 VDC supply: +24 VDC at pin 1 (Load IN, CPC1002N pin 4), load between pin 2 (Load OUT, CPC1002N pin 3) and GND (UB−)

Connection with external power supply: Alternatively, the load can be powered from a separate voltage source, e.g., 5 VDC or 12 VDC. In this case, the positive terminal of the external power supply is connected to Load IN (pin 1). The load also receives its GND from the external power supply, not from GND (UB−) of the Thermobox.

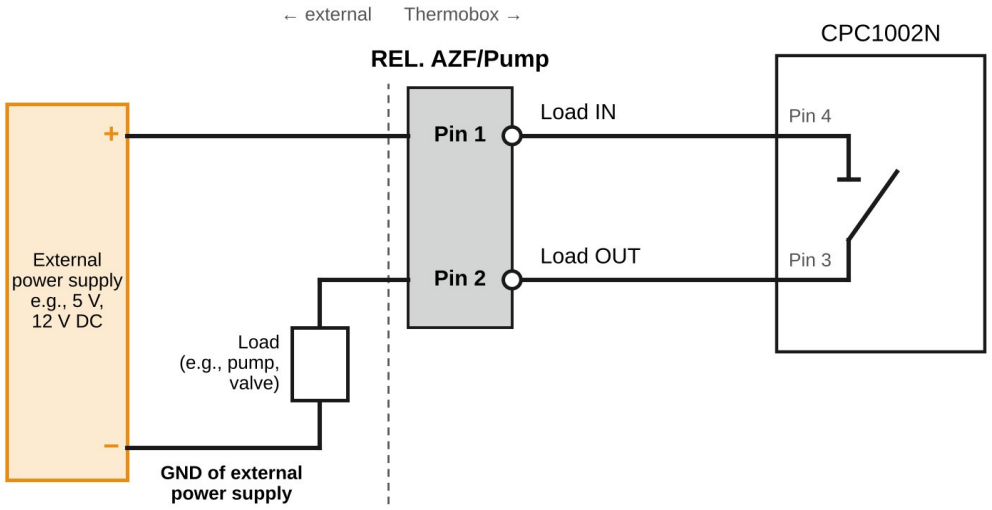

Figure 34: Relay output REL. AZF/Pump (Thermobox V5) with external power supply: positive terminal at pin 1 (Load IN), load between pin 2 (Load OUT) and GND of the external power supply

Connection example with an externally controlled AZF (eVP, eVV): Section 14.1.1.

NOTICE

Observe the connection direction of the relay output

The solid-state relay switches only if connected in the correct direction. Pin 1 is Load IN, pin 2 is Load OUT.

- Voltage max. 60 VDC.
- Load current max. 700 mA.
- With an external power supply, connect the GND of the load to the external power supply.

7.3.6 Thermobox V5 with Modbus Connection

The Thermobox V5 with Modbus option additionally has the MODBUS and Dig-OUT connectors. CAN, RS232, and the 24 VDC supply are assigned as in the standard version (Section 7.3.5).

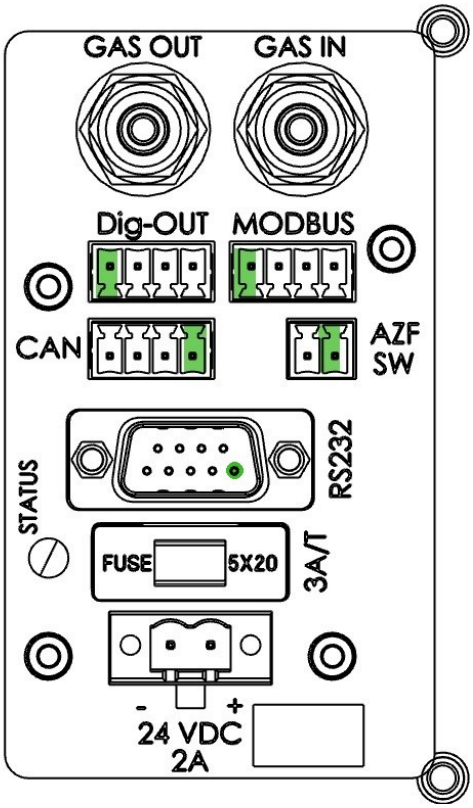

Figure 35: Connection panel of the Thermobox V5 with Modbus connection (pin 1 marked in green)

Information

Pin numbering: on the upper connectors (Dig-OUT, MODBUS), pin 1 is on the left; on the connectors below (CAN, AZF SW), pin 1 is on the right.

The relay output AZF SW is functionally identical to REL. AZF/Pump but wired differently: pin 1 = +24 V, the load is connected to pin 2 (Load). Connect the GND terminal of the load to GND (UB−) of the 24 VDC supply.

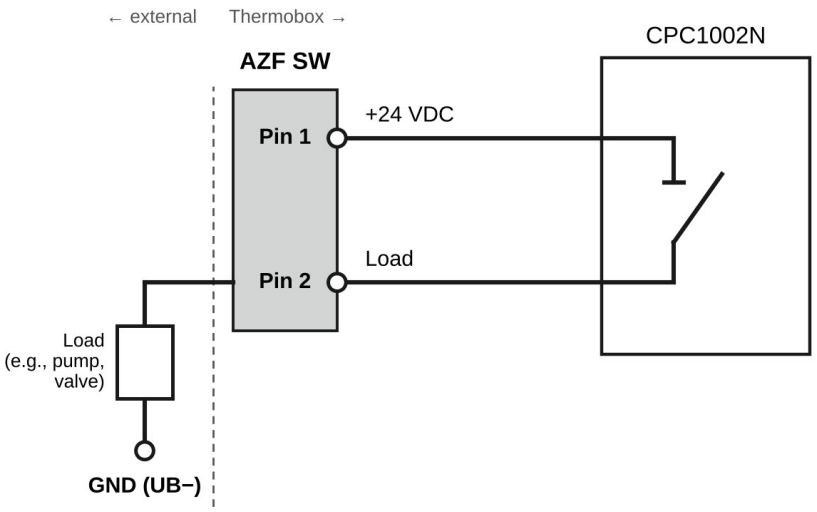

Figure 36: Schematic diagram of relay output AZF SW (Thermobox V5 with Modbus connection): pin 1 +24 VDC, pin 2 Load; load return line to GND (UB−)

Connection	Pin	Signal
MODBUS	1	GND_M (Modbus reference potential)
	2	D0 (B−)
	3	D1 (A+)
	4	PE
RS232	2	TxD (output)
	3	RxD (input)
	5	GND (interface)
CAN	1	GND (interface)
	2	CAN-L
	3	CAN-H
AZF SW	1	+24 V
	2	Load (switched output, CPC1002N); GND of the load to GND (UB−)
Dig-OUT	1	DIO1 – external zero-point trigger (min. 4 s low)
	2	DIO2
	3	DIO3
	4	GND

Table 28: Pin assignment MODBUS, RS232, CAN, AZF SW, and Dig-OUT (Thermobox V5 with Modbus connection)

NOTICE

Do not connect GND_M to earth

Connecting GND_M to earth (PE) cancels the isolation of the Modbus interface (critical isolation violation).

▶️ Never connect GND_M to earth or PE.

Information

If a module in the Thermobox is configured for Modbus, communication via RS232 is no longer possible, because the interface selector switch is located inside the Thermobox.

7.4 RS232

Interface parameters: 115,200 baud, 8 data bits, 1 stop bit, no parity.

Information

The RS232 cable must not exceed 5 m in length. For longer distances, use CAN or Modbus; use shielded, low-capacitance cables.

7.5 CAN Bus

The two RJ45 sockets (X1, X4) are connected in parallel. This allows you to connect several modules with standard patch cables. Protocol and commands: communication manual.

Bus termination: A 120 Ω termination resistor must be active at the first and last node of the CAN bus. It is integrated on the base boards:

Base board	120 Ω termination resistor
V1.8.x	can be enabled via jumper JP2
V1.9.x	can be enabled via software
IR-compact V2.0.x	can be enabled via software

Table 29: CAN bus termination on the base boards

Parameter	Value / setting
Supported baud rates	125 kbaud, 250 kbaud, 500 kbaud, 1 Mbaud
Node ID or CAN transmit/receive IDs	configurable via software (MARS® Tool via RS232)
Bus termination V1.9.x / V2.0.x	can be enabled via software

Table 30: CAN parameters

The configuration commands are described in the communication manual.

7.6 Modbus RTU (Option)

With the Modbus option, the module communicates via Modbus RTU (RS485, firmware > 5540). Baud rate (9,600 to 115,200 baud) and parity are set by Wi.Tec during production.

- RS232/Modbus switchover via DIP switches: SWMB all “on” and SW232 all “off” = Modbus; the reverse = RS232. The module detects the setting at every power-up.
- Without Thermobox: connection via one of the two RJ45 sockets of the Connector Board MBB V1.0; D1 = A+, D0 = B− (Section 7.3.4).
- With Thermobox: connection via the 4-pin MODBUS connector on the connection panel (pin assignment: Section 7.3.6).

Register list and data formats: communication manual.

7.7 Digital Inputs and Outputs

Signal	Function
DIO1	External zero-point trigger: at least 4 s low (to GND) sets the zero point of all gas channels
DIO2	not assigned / reserved
DIO3	Output for controlling the auto-zero function (AZF) or external switching output

Table 31: Digital inputs and outputs (J4 or Dig.OUT)

7.8 Status LEDs

LED	Meaning
LED2	System clock, flashes at 1 Hz
LED3	I²C communication with sensors
LED4	Detector signal status: green = detector signal above the alarm level, red = detector signal below the alarm level (factory setting 50 %)
LED5	RS232 communication
DIO3	AZF on/off

Table 32: Status LEDs on base boards V1.9.x and IR-compact V2.0.x



Figure 37: Status LEDs (base board V1.9.x)

LED4 (red/green status indicator): The LED indicates whether the detector signal is sufficient. Green means the detector signal is above the alarm level; the module is operating in the normal range. Red means the detector signal has dropped below the alarm level, e.g., due to an aged emitter or a contaminated or fogged cell (Section 11).

The alarm level is factory-set to 50 %. It can be adjusted with the MARS® Tool (see separate MARS® Tool manual).

8 Commissioning

8.1 Prerequisites

For correct measurement, the following conditions must be met:

1. Dry, non-condensing, and dust-free environment.
2. Protection of the ESD-sensitive components (base board, pressure sensor, emitter, detector).
3. Stable sample gas humidity, e.g., by means of a sample gas cooler or Nafion™ tubing.
4. Stable pressure within specification (pump without pressure fluctuations).
5. Stable flow rate within specification; calibration is performed at 0.7–1 l/min.
6. Stable module temperature within specification.
7. Secure mounting and unchanged mounting orientation.
8. Regular adjustment of zero and span; the interval depends on the application.
9. Reliable particle filtering < 0.1 µm.

8.2 Initial Commissioning

Prerequisite: The module is acclimatized, mounted (Section 5), and connected on the gas side (Section 6).

1. Perform a leak test (Section 6.6).
2. Connect the data cable to RS232 and to the PC (USB-RS232 adapter).
3. Connect the 24 VDC supply and switch it on.
4. Check that LED2 flashes at 1 Hz.
5. Establish the connection with the PC software and check the measured values (Section 9).
6. Operate the module for at least 30 minutes under stable conditions. Warm-up time without heating < 15 min; heated modules need approx. 30 minutes to reach the set-point temperature (at 25 °C starting temperature, longer at lower temperatures, Section 4.3). Do not adjust until the set-point temperature has been reached.
7. Perform a zero-point adjustment with zero gas (Section 10.4). Which zero gas is suitable depends on the sample gas (Section 10.2).

> **Zero gas**
> The zero gas must not contain the measured component. For CO_2 modules, ambient air is unsuitable as zero gas, as it always contains approx. 400–1,000 ppm CO_2. Use nitrogen (N_2) of purity 2.8, preferably 5.0, in this case.

✔ **Result:** The module is measuring. The zero point is adjusted to the installation situation.

The location of the RS232 connection depends on the module and enclosure. The following figures show the three configurations: A – INFRA.sens with base board IR-compact, B – ULTRA.sens with base board V1.9, C – gas measurement module in the Thermobox.

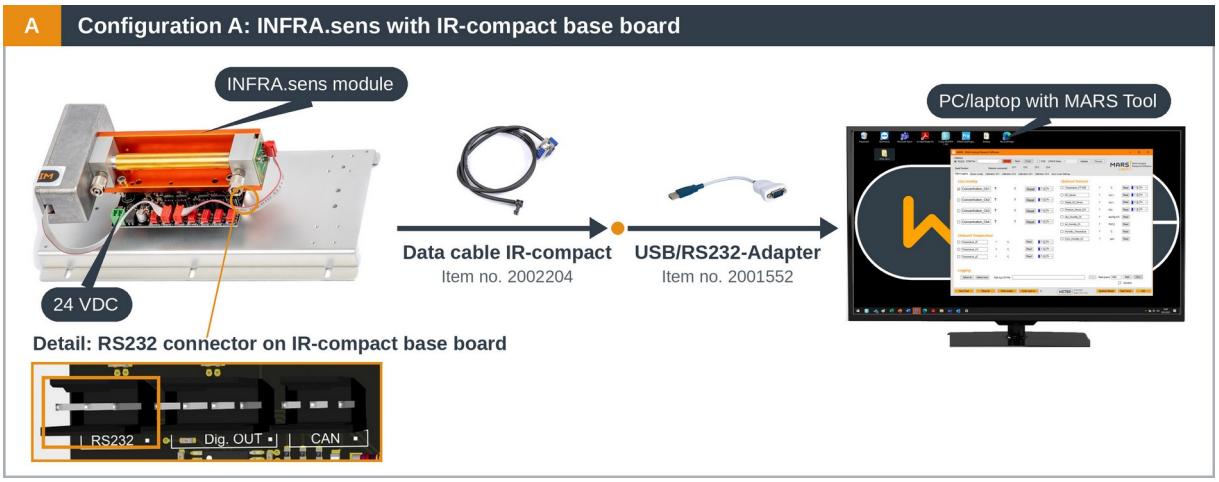

Figure 38: Configuration A: INFRA.sens with base board IR-compact – IR-compact data cable at the RS232 connection of the base board, USB/RS232 adapter at the PC

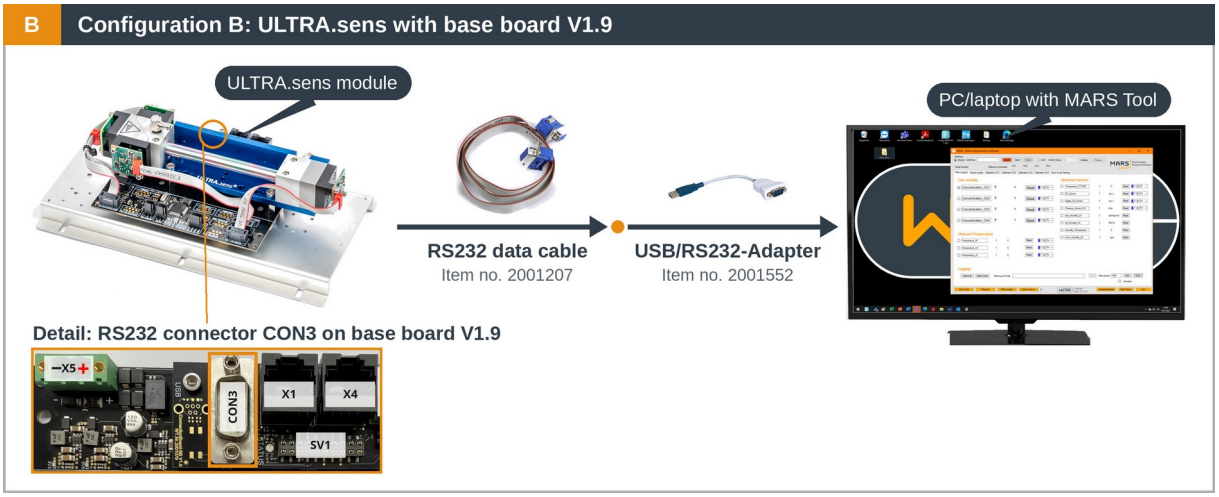

Figure 39: Configuration B: ULTRA.sens with base board V1.9 – RS232 data cable at the D-sub socket CON3, USB/RS232 adapter at the PC

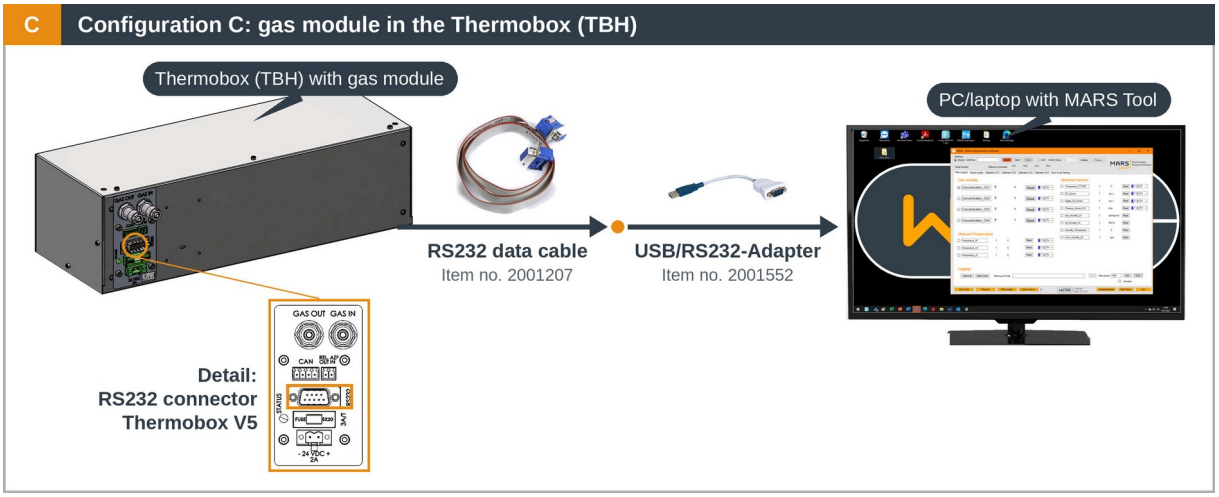

Figure 40: Configuration C: gas measurement module in the Thermobox (TBH) – RS232 data cable at the RS232 D-sub socket of the Thermobox V5, USB/RS232 adapter at the PC

9 Software

The MARS® Tool light software (MARS® = Multi Analyse Research Software) is used for reading out measured values, data logging, and adjustment on the PC. Its operation is described in the separate MARS® Tool light manual.

9.1 Download and Installation

The latest version of MARS® Tool light is available for download on the Wi.Tec website: https://www.witec-sensorik.de/en/downloads/software/. After completing the form, you will receive the download link by e-mail.

Figure 41: QR code for the MARS® Tool light download page

1. Download the software package via the download link.
2. Run the setup file and install MARS® Tool light on the PC. Administrator rights are recommended for installation.
3. Connect the USB-RS232 adapter; the corresponding driver must be installed. Check the assigned COM port in the Windows Device Manager.
4. Start MARS® Tool light, select the COM port, and establish the connection to the module.

Prerequisite	Requirement
Operating system	Windows 10 or 11
Interface	USB/RS232 adapter (Item no. 2001552) or CAN-USB adapter (Item no. 2002089)
Cable	RS232 data cable (on order only): Item no. 2002204 (IR-compact), 2001207 (V1.9.x and Thermobox), 2000592 (V1.8.x)

Table 33: PC requirements

9.2 Reading Out Without the MARS® Tool

For simple queries, a terminal program such as HTerm is sufficient. In RS232 mode, the module responds with ASCII characters, so the responses are directly readable.

Terminal program setting	Value
Interface	COM port of the USB-RS232 adapter
Baud rate	115,200 baud (factory setting)
Data format	8 data bits, no parity, 1 stop bit (8N1)

Table 34: Interface parameters for a terminal program

The commands and the response format are described in the communication manual.

For integration into your own control systems (RS232, CAN, Modbus, CANopen), the communication manual describes all commands, registers, the status byte, and the device ID.

10 Adjustment

For accurate measurement, the zero point and span point must be checked regularly and adjusted if they deviate. This section describes the gases, procedure, and waiting times. The operating steps on the PC are described in the MARS® Tool light manual; the commands for custom controllers are described in the communication manual.

10.1 Check and adjustment intervals

Check	Recommended interval	Adjust if
Check zero point	weekly (or automatically with AZF)	Deviation > 2 % of full scale
Check span point	monthly	Deviation > 2 % of full scale

Table 35: Recommended check intervals

The appropriate interval depends on the application, the required accuracy, and the ambient conditions.

10.2 Zero gas

Suitable zero gases are gases that do not contain the measured component, e.g. nitrogen (N_2), argon, hydrogen, or purified ambient air. For automatic zero-point adjustments, we recommend an N_2 cylinder (or another inert gas) with a solenoid valve, e.g. the auto-zero function (Section 10.7).

Information

Which zero gas is suitable depends on the sample gas. Ambient air is suitable only if it does not contain the measured component. It is unsuitable for CO_2 measurements because it always contains approx. 400–1000 ppm CO_2; in this case, use nitrogen (N_2) of purity 2.8, preferably 5.0.

If the measurement depends on the carrier gas, adjust the zero point channel by channel using the carrier gas of your application (Appendix A.3).

10.3 Span gas

For span-point adjustment, you need a span gas of known concentration, ideally a certified span gas cylinder. The concentration is stated on the label or in the certificate (e.g. 480.00 ppm CO_2). The span gas concentration should be close to full scale and deviate from it by no more than 20 %.

10.4 Zero-point adjustment

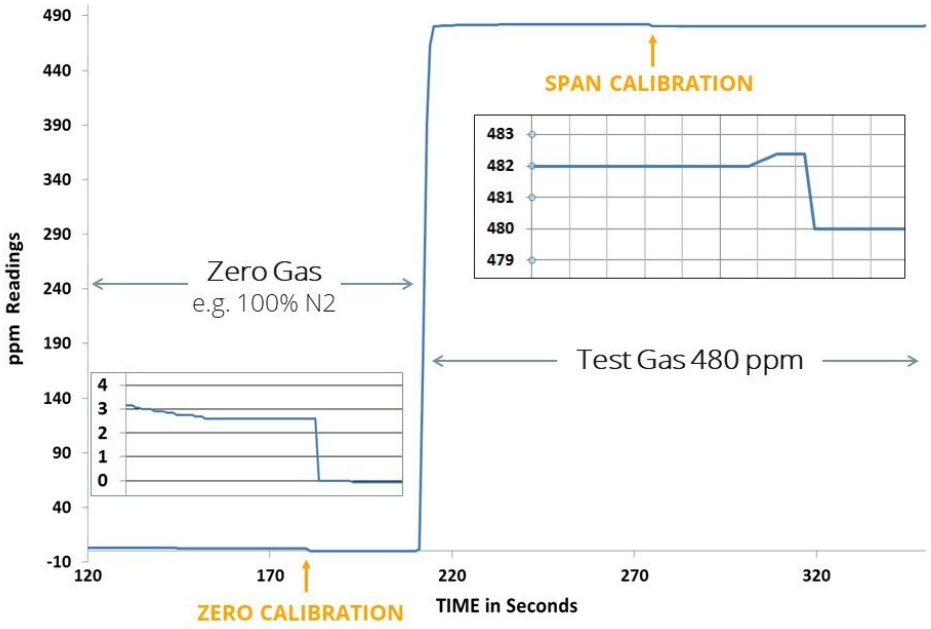

Figure 42: Concentration reading during zero-point and span-point adjustment

Prerequisite: The module has been operating under stable conditions for at least 30 minutes; heated modules have reached their setpoint temperature.

1. Purge the entire measuring system with zero gas at a flow rate of 1 l/min.
2. Wait until the reading is stable (fluctuation < 1 % of full scale).
3. Set the zero point: for all channels together or channel by channel – via MARS® Tool light, via a command over the interface, or with the external zero-point trigger (Section 10.6).

✔ **Result:** The concentration reading shows 0.00 ppm.

10.5 Span-point adjustment

Prerequisite: A zero-point adjustment with inert gas (e.g. N_2) has been performed immediately beforehand.

1. Purge the entire measuring system with span gas at a flow rate of 1 l/min.
2. Wait until the reading is stable (fluctuation < 1 % of the measuring range). For adhesive gases such as SO_2 or NO_2, wait longer (Section 6.5).
3. Enter the span gas concentration for the relevant channel and set the span point.
4. Shut off the span gas and switch back to sample gas.

✔ **Result:** The reading matches the span gas concentration. The module calculates a correction factor and stores it permanently.

10.6 External zero-point trigger

Without a PC and interface, you can set the zero point via DIO1, the external zero-point trigger: apply zero gas, allow the reading to stabilize, then pull DIO1 low (GND) for at least 4 seconds. The zero point of all gas channels is set.

10.7 Automatic zero-point adjustment (AZF)

The auto-zero function switches to zero gas at adjustable intervals (1 hour to 1 month), purges for an adjustable time, and sets the zero point. The measured value is frozen during purging. The AZF can be used from base board revision 1.8.2 and firmware revision 528 onward. Variants and technical data: Section 14.1.

10.8 O2.sens and HUMI.sens

- O2.sens: zero point (offset) with oxygen-free gas, e.g. N_2; span point with ambient air (20.95 vol% O_2) or span gas.
- After replacing an O2 sensor, “1.” may appear in the data log. In this case, the sensor must be reset and readjusted (O2.sens service instructions).

11 Status messages and troubleshooting

11.1 Status LED

Meaning of the status LEDs: Section 7.8. If LED4 lights red, the detector signal is below the alarm level (factory setting 50 %, adjustable with the MARS® Tool). Possible causes and remedies are listed in the fault table (Section 11.3).

11.2 Status byte

The module reports its state via a status byte, which you can read via the interface or in MARS® Tool light. It indicates whether the radiation sources are detected and whether their signal level is sufficient.

Bit	Meaning
Bit 0	IR emitter/EDL detected
Bit 2	UV LED 1 detected
Bit 3	UV LED 2 detected
Bit 4	IR emitter/EDL: signal level too low
Bit 6	UV LED 1: signal level too low
Bit 7	UV LED 2: signal level too low
Bit 1, Bit 5	not assigned

Table 36: Meaning of the bits in the status byte

Example CO_2 module without UV cell: **0xC7** = IR emitter detected, signal level in normal range (> 50 % intensity). **0xCF** = IR emitter detected, signal level below 50 %. The complete code table is in the communication manual.

11.3 Troubleshooting

Fault	Possible cause	Remedy
No connection to the PC	Wrong COM port, defective cable, RS232 line too long, interface set to Modbus	Check COM port, use the appropriate Wi.Tec data cable (Section 14), check cable length (Section 7.4), check RS232/Modbus DIP switch
LED2 does not flash	No or incorrect power supply	Check voltage and polarity (Section 7.1)
Measured value drifts	Temperature, pressure, or flow unstable; condensate; zero point outdated	Establish conditions as per Section 8.1, adjust zero point
Measured value fluctuates	Pressure pulsation of the pump, varying back pressure, interference on ground	Use a pulsation-free pump, check exhaust routing, check grounding
Slow response	Hang-up effect, long lines, insufficient flow	Viton/PTFE tubing, shorter lines, increase flow (Section 6)

Fault	Possible cause	Remedy
LED4 red or signal level < 50 % (status byte)	Emitter aged, cell contaminated or fogged	Check sample conditioning; contact Wi.Tec service (Section 13.1)
Emitter not detected (status byte)	Emitter or connection defective	Contact Wi.Tec service (Section 13.1)
O2 measured value drops sharply	O2.sens at end of service life (accelerated signal decline)	Replace sensor element (Section 12)
Analog output incorrect	DIP switch or scaling incorrect, output overloaded	Check settings (Section 14.2), load ≥ 100 kΩ

Table 37: Faults, causes, and remedies

12 Maintenance and servicing

⚠ WARNING

Toxic gases in the gas path

When working on the gas path, sample gas (e.g. H_2S, CO) may escape.

▶️ Before any maintenance, purge the gas path and gas sampling point with ambient air or nitrogen for at least 10 minutes.

12.1 Maintenance schedule

Task	Interval	Note
Check and adjust zero point	weekly or via AZF	Section 10
Check span point and adjust	monthly	Section 10
Check particle filter, replace if necessary	regularly, depending on particle load	Section 6.4
Check sample gas cooler/condensate drain	regularly, depending on the application	Appendix A
Leak test	after mechanical changes to the gas path and after extended downtime; regular testing not strictly necessary	Section 6.6
Replace O2.sens sensor element	before end of service life (typically 1–6 years, Section 3.6.1)	Section 3.6; trained personnel only

Table 38: Maintenance schedule

12.2 Component replacement

Replacement of components, e.g. the O2.sens sensor element in the Thermobox, may only be performed by trained personnel in accordance with the relevant Wi.Tec service instructions. Spare parts: Section 14.3.

13 Service, return, and disposal

13.1 Contact

Wi.Tec-Sensorik GmbH
Schepersweg 41–61
46485 Wesel
Germany
Phone +49 281 206578-20
info@witec-sensorik.de
www.witec-sensorik.de

When making inquiries, have the serial number and device ID from the nameplate ready.

13.2 Return (RMA)

The RMA form for returns is available at https://www.witec-sensorik.de/en/service-returns/.

Figure 43: QR code for the RMA form (service returns)

1. Complete the RMA form online.
2. If toxic or aggressive gases were measured, purge the module before shipping. The decontamination declaration is included in the RMA form and is completed there.
3. Ship the module in its original packaging or with equivalent protection.

13.3 Disposal

The gas measurement module is an electronic device and must not be disposed of with household waste. Dispose of it in accordance with local regulations for waste electrical and electronic equipment (WEEE).

For a fee, Wi.Tec takes back gas measurement modules and disposes of them properly. Please contact us (Section 13.1); the return is handled via the RMA form (Section 13.2).

NOTICE

Disposal of the O2.sens

The electrochemical O2 sensor contains a liquid electrolyte. Wi.Tec does not take back spent O2 sensors.

- ▶ Dispose of spent O2 sensors yourself in accordance with local regulations.
- ▶ Do not open the sensors.

14 Accessories and options

14.1 Auto-zero function (AZF)

The AZF is integrated into the gas line of the module and performs the zero-point adjustment automatically (Section 10.7). Variants with pump (VP) draw in ambient air as zero gas; variants with two valves (VV) switch between a zero gas cylinder and process gas.



Figure 44: Auto-zero function VP

Variant	WT no.	Function
AZF eVP	2001469	Valve/pump; external control 24 V
AZF VP	2001467	Valve/pump; controlled by the module, configured via MARS® Tool
AZF eVV	2001470	Valve/valve; external control 24 V
AZF VV	2001468	Valve/valve; controlled by the module, configured via MARS® Tool

Table 39: Variants of the auto-zero function

Feature	AZF VP	AZF VV
Dimensions (H × W × L)	36 × 86.5 × 75 mm (height with tubing approx. 60 mm)	same as VP
Weight	150 g	150 g
Tube connection	4/6 mm	4/6 mm
Zero-point response time	approx. 15 s (depending on flow and concentration)	approx. 15 s
Pressure drop	25 mbar at 1 l/min	25 mbar at 1 l/min
Pump	0.35 l/min zero gas, 300 mbar outlet pressure	–
Valve Kv value	0.1 m³/h (20 °C, 1 bar)	0.1 m³/h
Wetted materials	EPDM/PPS; block AlMg4.5Mn anodized	same as VP
Leak rate	< $1 \cdot 10^{-4}$ mbar·l/s	< $1 \cdot 10^{-4}$ mbar·l/s
Power supply	15–30 VDC; 5 mA passive, 90 mA active (at 24 VDC)	same as VP
Digital input	2–3 V	2–3 V

Feature	AZF VP	AZF VV
Operating temperature / storage temperature	5–55 °C / −20–60 °C	same as VP
Air pressure / humidity	800–1,200 mbar / 0–95 % RH, non-condensing	same as VP

Table 40: Technical data of the auto-zero function

Information

A safety filter is recommended at the zero gas inlet.

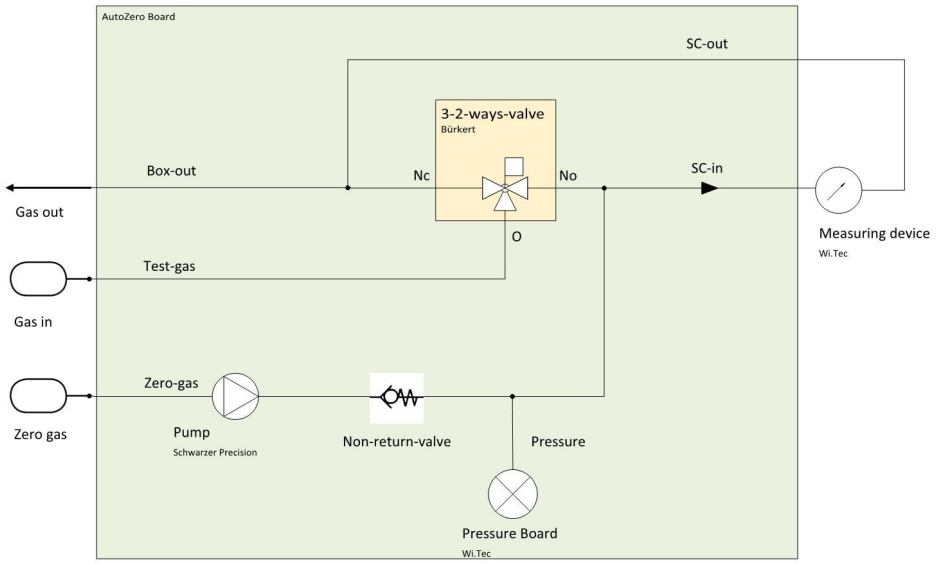

Figure 45: Gas flow diagram AZF VP

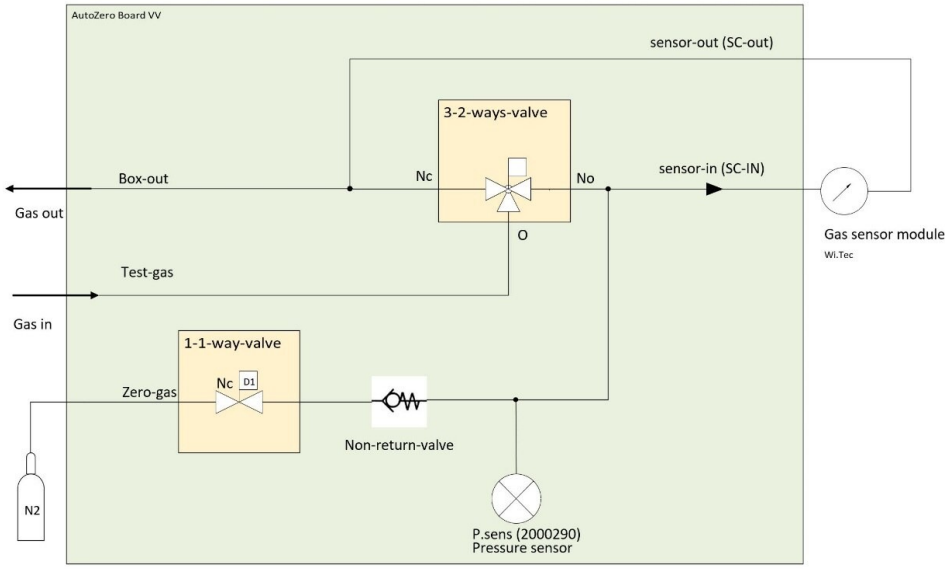

Figure 46: Gas flow diagram AZF VV

14.1.1 Connecting an external AZF to the Thermobox

The AZF eVP and AZF eVV variants are controlled externally with 24 V. On the Thermobox, the relay output REL. AZF/Pump switches the AZF power supply (Section 7.3.5). The wiring is shown in the following figure.

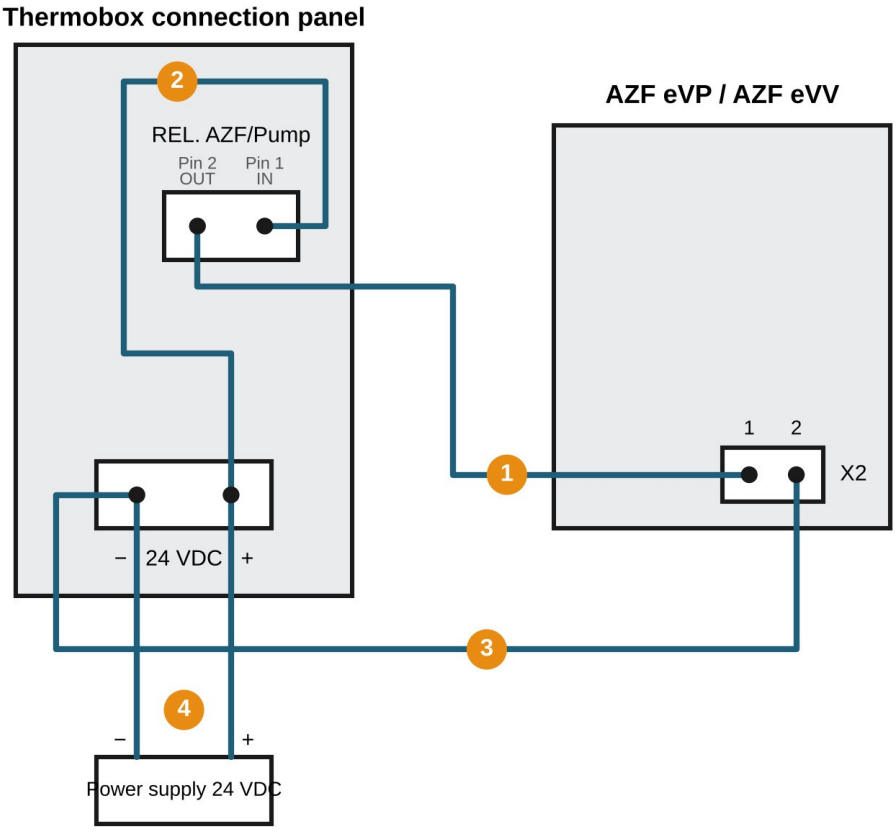

Figure 47: Connecting an AZF eVP/eVV to the Thermobox V5 (schematic)

No.	Line	Connection
1	Switching line	REL. AZF/Pump pin 2 (Load OUT) → AZF X2 pin 1
2	Jumper	24 VDC + → REL. AZF/Pump pin 1 (Load IN)
3	Return line	AZF X2 pin 2 → 24 VDC −
4	Power supply	24 VDC power supply → 24 VDC terminal of the Thermobox

Table 41: Lines for connecting the AZF to the Thermobox

Information

The connecting cable (lines 1 to 3) is also available pre-assembled from Wi.Tec: Item no. 2004181.

14.2 Analog output

The analog output board adds 4 voltage outputs to the digital interfaces. It is connected to the base board via connector SV1; J1 is the output, S1 is the DIP switch for the voltage range.

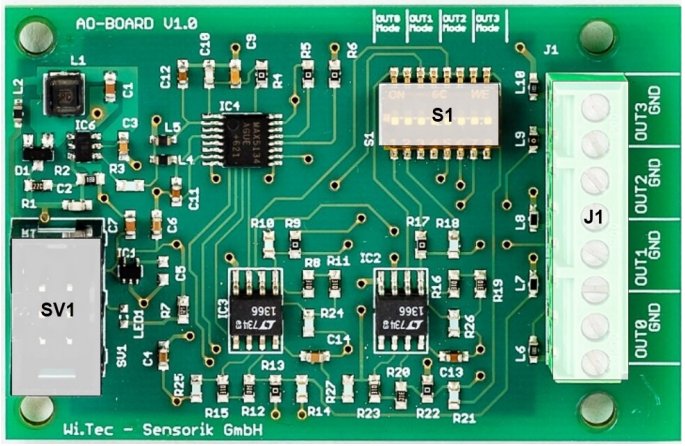

Figure 48: Analog output board with DIP switch S1 and output J1

Output	Gas channel
OUT0	Gas-Ch1
OUT1	Gas-Ch2
OUT2	Gas-Ch3
OUT3	Gas-Ch4

Table 42: Assignment of the analog outputs

Channel	DIP switch S1	0–2 V	0–5 V	0–10 V
Ch1	Switch 1 / 2	1 / 0	0 / 1	0 / 0
Ch2	Switch 3 / 4	1 / 0	0 / 1	0 / 0
Ch3	Switch 5 / 6	1 / 0	0 / 1	0 / 0
Ch4	Switch 7 / 8	1 / 0	0 / 1	0 / 0

Table 43: Voltage range setting per channel

NOTICE

Overloading of the analog outputs

The outputs are not current-limited. Excessive load current destroys the output driver.

▶️ Continuous current max. 10 mA; load resistance at least 100 kΩ.

The scaling (e.g. 0–6,000 ppm = 0–10 V) is set by Wi.Tec on delivery. It can be changed later with the MARS® Tool (MARS® Tool light manual).

Feature	Value
Connection	6-pin ribbon connector to the base board
Communication	SPI
Outputs	4
Voltage range	0–2 V, 0–5 V, or 0–10 V (DIP switch)

Feature	Value
Resolution	16 bit
Min. load resistance	100 kΩ
Update rate	1 s
Dimensions	65 × 42 mm
Wire cross-section	AWG 16–30 (1.31–0.051 mm²)
Ambient conditions	0–60 °C, < 80 % RH

Table 44: Technical data analog output

14.2.1 Output of HUMI.sens and O2.sens (option)

From firmware 5.496 onward, the measured value of a HUMI.sens or O2.sens can be routed to an analog output. Which output is used depends on the module type. The gas channel normally assigned to this output is then no longer output as an analog signal.

Module type	OUT0	OUT1	OUT2	OUT3
INFRA.sens	Gas-Ch1	Gas-Ch2	Gas-Ch3	**HUMI.sens [ppm] or O2.sens [vol%]**
ULTRA.sens	Gas-Ch1	**HUMI.sens [ppm] or O2.sens [vol%]**	Gas-Ch3	Gas-Ch4
KOMBI.sens	Gas-Ch1	Gas-Ch2	Gas-Ch3	Gas-Ch4

Table 45: Assignment of the analog outputs with external sensors per module type (orange = HUMI.sens/O2.sens)

Analog output of HUMI.sens and O2.sens is not available on the KOMBI.sens. Only one additional sensor is output as an analog signal at a time; if both HUMI.sens and O2.sens are present, ask Sales which one is output.

Scaling: By default, the full voltage range (0–10 V, or 0–2 V or 0–5 V depending on DIP switch S1) corresponds to the following measuring ranges:

Additional sensor	Default scaling	Example at 0–10 V
HUMI.sens	0–30,000 ppm H_2O	15,000 ppm = 5 V
O2.sens	0–25 vol% O_2	20.9 vol% (air) ≈ 8.4 V

Table 46: Default scaling of the additional sensors at the analog output

The scaling can be changed in the MARS® Tool: in the **Config_CH4** tab (INFRA.sens) or **Config_CH2** tab (ULTRA.sens), enter the new range under **Measurement Range Ch4** or **Ch2** respectively and apply it with **Write**.

Assigning the O2.sens: To route the O2.sens to the analog output, the corresponding measurement type in the device ID must be set to “External Sensor”:

Module type	Setting in the MARS® Tool (Ext. Sensors tab)
INFRA.sens	Measurement Type 4 = External Sensor, then Write
ULTRA.sens	Measurement Type 2 = External Sensor, then Write

Table 47: Assigning the O2.sens to the analog output via the device ID

Information
Operation of the MARS® Tool is described in the separate MARS® Tool light manual.

14.3 Other accessories and spare parts

Item	Item no.	Note
Plug-in power supply 24 VDC for base board V1.8.x, V1.9.x, and Thermobox	2003262	60 W; 100–240 VAC, 50/60 Hz; 2.5 A
Plug-in power supply 24 VDC for base board IR-compact V2.0.x	2003137	60 W; 2.5 A at 24 V; 100–240 VAC, 50/60 Hz
USB/RS232 adapter	2001552	Section 8.2, 9
AZF cable for external version (AZF eVP/eVV) to Thermobox	2004181	Section 14.1.1
CAN-USB adapter	2002089	
Adapter plug CAN-USB adapter D-Sub 9 to RJ45	2002127	
CAN bus data cable for base board IR-compact, direct to CAN-USB adapter	2002205	
RS232 data cable for base board IR-compact V2.0.x	2002204	on request only
RS232 data cable for base board V1.9.x and Thermobox	2001207	on request only
RS232 data cable for base board V1.8.x	2000592	on request only
Particle filter < 0.1 µm with 4/6 mm tube connection, stainless steel fittings	2002325	
Particle filter < 0.1 µm with 4 mm tube fitting, stainless steel fittings	2003570	
O2.sensD spare parts kit	2003884	digital O2 sensor
O2.sens spare parts kit	2003885	analog O2 sensor
O2.sensD torque wrench with adapter	2003941	Tool for sensor replacement
O2.sens torque wrench with adapter	2003950	Tool for sensor replacement
O2.sens cable set	2003539	

Table 48: Accessories and spare parts

15 Technical data

The table lists general data. The specifications in the data sheet of your module are authoritative.

Feature	INFRA.sens	INFRA.sens compact	ULTRA.sens
Measuring principle	NDIR, 2–12 µm	NDIR, 2–12 µm	NDUV, 200–450 nm
Power supply	24 VDC (per base board)	24 VDC (9–30 V)	24 VDC (15–30 V)
Current consumption	< 300 mA	< 50 mA	< 100 mA
Power consumption	< 9 W	< 1 W	< 3 W
Warm-up time	< 15 min; with heating approx. 30 min (from 25 °C)	< 15 min; with heating approx. 30 min (from 25 °C)	< 15 min; with heating approx. 30 min (from 25 °C)
Dimensions (W × H × D)	350 × 75 × 120 mm	per cell, see data sheet	353 × 81.5 × 120 mm
Weight	approx. 600–1,200 g	see data sheet	approx. 720 g
Ambient conditions	5–45 °C, < 95 % RH non-condensing	same as INFRA.sens	same as INFRA.sens
Flow rate	0.1–1.5 l/min (calibrated 0.7–1 l/min)	same as INFRA.sens	same as INFRA.sens
Gas connection	Tubing 4/6 mm, Viton or PTFE	same as INFRA.sens	same as INFRA.sens
Interfaces	RS232, CAN; optional Modbus RTU, analog output	RS232, CAN; optional analog output	RS232, CAN; optional Modbus RTU, analog output
PC requirement	Windows 10/11	Windows 10/11	Windows 10/11

Table 49: General technical data

Appendix A – Application notes

A.1 Sample conditioning

Stable measurement requires particle-free sample gas with a dew point below the cell temperature, at constant pressure and flow (Section 6.4). Typical setup: gas sampling → particle filter → sample gas cooler → pump → flowmeter → gas measurement module → exhaust.

A.2 Corrosive gases

For corrosive gases such as Cl_2, H_2S, or high SO_2 concentrations, use the processline version (stainless steel 1.4571, optionally with Silcolloy® 2000 or SilcoNert® 2000, Section 4.4) and stainless steel or PTFE lines.

A.3 Carrier gas dependence

The composition of the carrier gas can affect the reading. Adjust the zero point channel by channel using the carrier gas of your application.

A.4 Cross-sensitivities

- NDUV: water vapor, CO_2, and hydrocarbons do not interfere.
- NO_2 has a cross-sensitivity on the SO_2 measurement; it is compensated when NO_2 is measured simultaneously.
- O2.sens: for the influence of accompanying gases, see Section 3.6.

Appendix B – Declaration of conformity

Wi.Tec-Sensorik declares the following for the gas measurement modules supplied (supplier's declaration, as of 08/05/2026):

Regulation	Declaration
RoHS Directive 2011/65/EU incl. (EU) 2015/863	The limit values according to Annex II are complied with without making use of exemptions according to Annex III/IV.
REACH Regulation (EC) 1907/2006	No restricted substances according to Annex XVII, no substances subject to authorization according to Annex XIV; SVHC of the Candidate List (as of 02/04/2026) not above 0.1 % (w/w).
POP Regulation (EU) 2019/1021	No substances according to Annex I above the limit values.
Conflict Minerals Regulation (EU) 2017/821	Tin, tantalum, tungsten, and gold do not originate from conflict-affected and high-risk areas; due diligence according to OECD Guidance.
Packaging	Heavy metal limit of 100 ppm (sum of Pb, Cd, Hg, Cr VI) complied with.

Table 50: Declared substance compliance

The signed supplier's declaration is reproduced on the following pages. The customer name has been redacted.

Supplier's Declaration of Conformity

Supplier's Declaration of Conformity

Supplier name:	***Wi.Tec – Sensorik GmbH***
Address:	***Schepersweg 41, 46485 Wesel – GERMANY***
Company Registration No.:	***HRB 27128 Duisburg***
Customer name:	[redacted]

1. Does your company offer the following:

☐ Materials

☐ Components

☒ Electrical or electronic equipment

☐ Logistics and packing services

☐ Other services: _____

Based on the current legislation and guidelines listed from point 2 to 8 below, the supplier has reviewed all restricted substances relevant to the products supplied. Reference list of restricted substances: green-instruments-restricted-substance-list.xlsx.

2. Do your supplies comply with Regulation (EC) No 1907/2006 (REACH) – Registration, Evaluation, Authorisation and Restriction of Chemicals?

☒ Yes

☐ No

☐ Not applicable

Weblink: Regulation (EC) No 1907/2006 (REACH), consolidated version

Please choose the statements below that are true and relevant:

☒ The supply does not contain restricted substances listed in Annex XVII of REACH (restrictions on manufacture, placing on the market and use of certain dangerous substances, mixtures and articles), in its version applicable at the date of this declaration.

☐ The supply consists of substances or mixtures (chemicals) which are registered according to REACH; a Safety Data Sheet is delivered as part of the supply.

☒ The supply does not contain substances of the REACH Authorisation List (Annex XIV) requiring authorisation.

2a. REACH – Substances of Very High Concern (SVHC) / Candidate List

Reference: Candidate List of substances of very high concern for Authorisation pursuant to Article 59(10) REACH, published by ECHA: https://echa.europa.eu/de/candidate-list-table

Version referenced for this declaration: Candidate List as last updated on 4 February 2026, comprising 253 entries (n-hexane and 4,4'-[2,2,2-trifluoro-1-(trifluoromethyl)ethylidene]diphenol and its salts added in the update of 4 February 2026). *This declaration always relates to the version of the Candidate List in force on the date of signature.*

☒ Substances of Very High Concern (SVHC) of the Candidate List are not present in a concentration above 0.1 % (w/w) in any of the articles supplied.

Template V. 2.0 – 08-2026 Page 1 of 5

Figure 49: Supplier's Declaration of Conformity, page 1 of 5

Supplier's Declaration of Conformity

☐ One or more articles (at component level) contain SVHC of the Candidate List in a concentration above 0.1 % (w/w). The supplier informs the customer about the substance, its name, CAS/EC number and safe use instructions in accordance with Article 33 REACH.

☐ A document identifying the specific article and the relevant safety information about this SVHC is attached as PDF.

Note on SCIP: where an article supplied contains an SVHC above 0.1 % (w/w), the supplier confirms that the corresponding notification to the ECHA SCIP database (Article 9(1)(i) of Directive (EU) 2018/851, Waste Framework Directive) has been made and the SCIP number is communicated to the customer.

3. Do your supplies comply with Directive 2011/65/EU (RoHS 2) on the restriction of the use of certain hazardous substances in electrical and electronic equipment?

☒ Yes

☐ No

☐ Not applicable

Applicable legal basis: Directive 2011/65/EU (RoHS 2) as amended, in particular by Commission Delegated Directive (EU) 2015/863 of 31 March 2015 amending Annex II (addition of the four phthalates DEHP, BBP, DBP, DIBP – applicable since 22 July 2019), together with all Delegated Directives amending Annexes III and IV (exemptions) applicable at the date of this declaration.

Weblinks: Directive 2011/65/EU (consolidated) | Delegated Directive (EU) 2015/863 | European Commission – RoHS

The maximum concentration values by weight in homogeneous materials according to Annex II of Directive 2011/65/EU are complied with:

Restricted substance	Maximum concentration by weight in homogeneous material
Lead (Pb)	0.1 %
Mercury (Hg)	0.1 %
Cadmium (Cd)	0.01 %
Hexavalent chromium (Cr VI)	0.1 %
Polybrominated biphenyls (PBB)	0.1 %
Polybrominated diphenyl ethers (PBDE)	0.1 %
Bis(2-ethylhexyl) phthalate (DEHP)	0.1 %
Butyl benzyl phthalate (BBP)	0.1 %
Dibutyl phthalate (DBP)	0.1 %
Diisobutyl phthalate (DIBP)	0.1 %

☒ The supplied products comply with the limit values above without the use of exemptions under Annex III / Annex IV.

☐ The supplied products make use of the following exemption(s) under Annex III / Annex IV:

_____

Template V. 2.0 – 08-2026 Page 2 of 5

Figure 50: Supplier's Declaration of Conformity, page 2 of 5

Supplier's Declaration of Conformity

4. Do your supplies comply with Regulation (EU) 2019/1021 on persistent organic pollutants (POP Regulation)?

☒ Yes

☐ No

☐ Not applicable

Applicable legal basis: Regulation (EU) 2019/1021 of the European Parliament and of the Council of 20 June 2019 on persistent organic pollutants (recast), as amended, in particular by Commission Delegated Regulation (EU) 2025/718 (revision of the entries for PFOS, tightened unintentional trace contaminant limits and deletion of exemptions), Commission Delegated Regulation (EU) 2025/1930 (inclusion of Dechlorane Plus and its isomers in Annex I, applicable from 15 October 2025) and the Delegated Regulation including UV-328 in Annex I (phased UTC limits of 100 mg/kg, 10 mg/kg and 1 mg/kg).

Weblinks: Regulation (EU) 2019/1021 (consolidated) | ECHA – POPs

☒ The supplied products do not contain any substances listed in Annex I of Regulation (EU) 2019/1021 above the concentration limits specified therein – in particular PFOS and its derivatives, PFOA, its salts and PFOA-related compounds, PFHxS, its salts and related compounds, PFHxA, its salts and related compounds, short-chain chlorinated paraffins (SCCP), medium-chain chlorinated paraffins (MCCP) where listed, HBCDD, polybrominated diphenyl ethers (incl. decaBDE), UV-328, Dechlorane Plus and its isomers, and unintentionally produced POPs (PCDD/PCDF, PCB, HCB, PeCB).

☐ The supplied products contain the following POP substance(s) above the applicable limit value(s):

_____

☒ The supplier monitors amendments to Annex I and Annex II of the POP Regulation and will inform the customer without undue delay if a newly listed substance affects the products supplied.

5. Declaration on conflict minerals

Applicable legal basis: Regulation (EU) 2017/821 of the European Parliament and of the Council of 17 May 2017 laying down supply chain due diligence obligations for Union importers of tin, tantalum and tungsten, their ores, and gold originating from conflict-affected and high-risk areas (applicable since 1 January 2021), the OECD Due Diligence Guidance for Responsible Supply Chains of Minerals from Conflict-Affected and High-Risk Areas, and Section 1502 of the US Dodd-Frank Wall Street Reform and Consumer Protection Act.

Weblinks: Regulation (EU) 2017/821 | Responsible Minerals Initiative (CMRT)

☒ Yes – the supplied products comply with the requirements set out above.

☐ No

☐ Not applicable – the supplied products do not contain tin, tantalum, tungsten or gold (3TG).

Mineral / metal (3TG)	Status in supplied products
Tin (Sn) / cassiterite	Not sourced from conflict-affected or high-risk areas (CAHRA)
Tantalum (Ta) / columbite-tantalite	Not sourced from conflict-affected or high-risk areas (CAHRA)
Tungsten (W) / wolframite	Not sourced from conflict-affected or high-risk areas (CAHRA)
Gold (Au)	Not sourced from conflict-affected or high-risk

Template V. 2.0 – 08-2026 Page 3 of 5

Figure 51: Supplier's Declaration of Conformity, page 3 of 5

Supplier's Declaration of Conformity

Mineral / metal (3TG)	Status in supplied products
	areas (CAHRA)

☒ To the best of our knowledge and based on information obtained from our supply chain, the 3TG contained in the supplied products do not directly or indirectly finance or benefit armed groups in conflict-affected and high-risk areas.

☒ The supplier operates a due diligence process in its supply chain in line with the OECD Due Diligence Guidance and requests corresponding declarations from its own suppliers.

☐ A completed Conflict Minerals Reporting Template (CMRT, RMI – current version) is attached to / available on request with this declaration.

Note: On 16 October 2025 the European Commission recognised the Responsible Minerals Assurance Process (RMAP) of the Responsible Minerals Initiative as a supply chain due diligence scheme under Regulation (EU) 2017/821. The RMI updated the CMRT most recently on 17 April 2026.

6. Further substance-related obligations

☒ Packaging placed on the market complies with the heavy-metal limit of 100 ppm (sum of Pb, Cd, Hg, Cr VI) pursuant to the applicable EU packaging legislation.

☒ The supplier is not aware of any further legally binding substance restrictions applicable to the supplied products that are not covered by this declaration.

7. Non-compliance

If your supplies do not comply with any of the above requirements, please specify the restricted substances contained in your supply, the affected articles and the concentrations:

_____

_____

8. Validity and obligation to notify changes

This declaration is issued on the supplier's sole responsibility and is based on the information available to the supplier at the date of signature, including declarations obtained from upstream suppliers and, where applicable, analytical data. It applies to the articles listed below in the versions supplied at the date of signature.

The supplier undertakes to inform the customer without undue delay in writing if the products supplied cease to comply with the requirements declared above, if a substance newly added to the REACH Candidate List, to Annex XIV or XVII of REACH, to Annex II of Directive 2011/65/EU or to Annex I of Regulation (EU) 2019/1021 affects the products supplied, or if the composition of the products changes in a way that is relevant to this declaration.

Purchased items covered by this declaration

Article	Article
ULTRA.sens "GAS" AK100	HUMI.sens HR
ULTRA.sens NOx AK100 TBH	µP.sens
ULTRA.sens "GAS" AK250	P.sens
ULTRA.sens "GAS" AK550	KOMBI.sens ULR "GAS" AK550/AK5

Template V. 2.0 – 08-2026 Page 4 of 5

Figure 52: Supplier's Declaration of Conformity, page 4 of 5

Supplier's Declaration of Conformity

Article	Article
INFRA.sens "GAS" AK2	KOMBI.sens "GAS" AK5/AK250
INFRA.sens "GAS" AK5	INFRA.sens "GAS" AK2/AK5/AK20/AK100G/AK250G -compact
INFRA.sens "GAS" AK20	
INFRA.sens "GAS" AK100G	
INFRA.sens "GAS" AK250G	
KOMBI.sens "GAS"	

Date of declaration:	Signature and name:
05.08.2026	

Template V. 2.0 – 08-2026 Page 5 of 5

Figure 53: Supplier's Declaration of Conformity, page 5 of 5

Appendix C – Glossary and abbreviations

Term	Meaning
AK	Analysis cell (Analysenküvette); the number indicates the length in mm (e.g. AK250 = 250 mm)
AZF	Auto-zero function, automatic zero-point adjustment
Base board	Evaluation electronics of the gas measurement module
Ch1–Ch4	Gas measurement channels 1 to 4
Device ID	Identifier of the channel configuration (gas type and measuring method per channel)
EC	electrochemical
EDL	Electrodeless discharge lamp
ESD	Electrostatic discharge
Gas measurement module	Generic term for INFRA.sens, ULTRA.sens, KOMBI.sens, etc.
Adjustment	Setting the measuring instrument so that the reading matches the target value
Calibration	Determining the deviation between reading and target value without intervention
F.S.	Full scale (upper limit of the measuring range)
MEMS	Micro-electromechanical system
NDIR / NDUV	Non-dispersive infrared / ultraviolet absorption
Zero gas / span gas	Gas without the measured component / gas of known concentration
P.sens	Pressure sensor
RMA	Return Merchandise Authorization, return number
TCD (WLD)	Thermal conductivity detector